GUILD ◆ EDITION

Woodsmith®

Woodsmith.com

Vol. 39 / No. 232

OUR BEST TOOL CABINET EVER!

Inside:

Getting More from Your Small Shop

Router Table Setup Secrets

Table Saw Tough Cuts Made Easy

New Gear & Gadgets for the Shop

A Publication of Cruz Bay Publishing, Inc.

Woodsmith®

CREATIVE HOME GROUP
GENERAL MANAGER Donald B. Peschke
EDITORIAL MEDIA DIRECTOR Bryan Nelson
MANAGING EDITOR Vincent Ancona
SENIOR EDITORS Wyatt Myers, Phil Huber
ASSOCIATE EDITOR Robert Kemp
ASSISTANT EDITOR Erich Lage

EXECUTIVE ART DIRECTOR Todd Lambirth
SENIOR ILLUSTRATORS Harlan V. Clark, Dirk Ver Steeg, Peter J. Larson
SENIOR GRAPHIC DESIGNER Bob Zimmerman
GRAPHIC DESIGNER Becky Kralicek

CREATIVE DIRECTOR Chris Fitch
PROJECT DESIGNERS Dennis Volz, Dillon Baker
PROJECT DESIGNER/BUILDER John Doyle
CAD SPECIALIST Steve Johnson
SHOP CRAFTSMAN Dana Myers

SENIOR PHOTOGRAPHER Crayola England
ASSOCIATE STYLE DIRECTOR Rebecca Cunningham
SENIOR ELECTRONIC IMAGE SPECIALIST Allan Ruhnke
PRODUCTION ASSISTANT Minniette Johnson

Woodsmith® (ISSN 0164-4114) is published bimonthly by Cruz Bay Publishing, Inc., 5720 Flatiron Parkway, Boulder, CO 80301.
Woodsmith® is a registered trademark of Cruz Bay Publishing.
Copyright© 2017 Cruz Bay Publishing, Inc. All rights reserved.
Subscriptions: Single copy: $6.95.
Canadian Subscriptions: Canada Post Agreement No. 40038201. Send change of address information to PO Box 881, Station Main, Markham, ON L3P 8M6. Canada BN 82564 2911
Periodicals Postage Paid at Des Moines, IA, and at additional offices.
Postmaster: Send change of address to *Woodsmith*, Box 37274, Boone, IA 50037-0274.

Printed in U.S.A.

WoodsmithCustomerService.com

ONLINE SUBSCRIBER SERVICES

- **VIEW** your account information
- **RENEW** your subscription
- **CHECK** on a subscription payment
- **PAY** your bill
- **CHANGE** your mailing or e-mail address
- **VIEW/RENEW** your gift subscriptions
- **TELL US** if you've missed an issue

CUSTOMER SERVICE Phone: 800-333-5075 weekdays

SUBSCRIPTIONS
Customer Service
P.O. Box 842
Des Moines, IA 50304-9961
subscriptions@augusthome.com

EDITORIAL
Woodsmith Magazine
2200 Grand Avenue
Des Moines, IA 50312
woodsmith@woodsmith.com

ACTIVE INTEREST MEDIA

PRESIDENT & CEO **Andrew W. Clurman**
SENIOR VICE PRESIDENT, TREASURER & CFO **Michael Henry**
CHIEF INNOVATION OFFICER **Jonathan Dorn**
EXECUTIVE VICE PRESIDENT, OPERATIONS **Patricia B. Fox**

from the editor

Sawdust

Storage projects come in all shapes and sizes. And to paraphrase George Carlin, they're a great way to keep track of your stuff. In this issue, we're featuring a few solutions to this never-ending challenge.

If you take a look at page 34, you'll find a cool project for organizing and storing the typical items you use in an office or work area — a desk. While most desks are designed to be used while you're seated at it, this one is adjustable. It works just like any other desk when you're sitting down. But if you'd rather stand while you work, a quick adjustment swings the worksurface up to a comfortable height. Plus, making adjustments is easy — there are a pair of gas springs to help out.

Another great storage project is shown above (and on page 30) — a wood canister. But instead of a lid that simply rests on top, the lid is threaded to match threads on the inside of the canister. Cutting wood threads is often viewed as a difficult process requiring a lathe. Instead of turning the threads, our Creative Director, Chris Fitch, came up with a shop-built threading jig (page 22). All you'll need is a hand-held router and a special bit to quickly and easily cut both the inside and outside threads in a wide range of sizes.

Finally, every shop needs storage. The tool cabinet shown on page 42 is a top-notch solution for storing everything from hand and power tools to the hardware and supplies you use in your shop every day. Storage options include drawers, shelves, and custom tool holders on the insides of the doors. The Craftsman-style design and the simple hand-carved molding around the top give it a classic look suitable for any shop.

Like George, we all have a lot of stuff. But the projects in this issue are sure to help you get a handle on keeping track of it.

EDITORIAL ASSISTANCE. Do you have a passion for woodworking? Do you enjoy telling others about it? If that's the case, you may be interested to learn that we're looking for someone to join our editorial team here in Des Moines, Iowa. You can let us know by emailing a cover letter and a résumé highlighting your experiences to *Professionals@AugustHome.com*. Or if you'd prefer, you can simply mail it to Human Resources, 2200 Grand Avenue, Des Moines, IA 50312.

Bryan

contents

No. 232 August/September 2017

Projects

weekend project

Smartphone Amplifier 18

The music coming out of a smartphone's speaker isn't the greatest. This quick and easy project gives the speaker a boost and ensures that your tunes are heard loud and clear.

shop project

Threading Jig 22

With this simple jig, you'll be creating both inside and outside threads that match perfectly. A threaded metal rod is the key to creating both sets of threads.

weekend project

Threaded Lid Canisters 30

Wood canisters have been used for generations for all types of storage. The threaded lid is a great way to secure the contents inside without using any hardware.

designer project

Adjustable Desk 34

Whether you're sitting or standing, adjusting the top of this desk is a snap. Plus, shop-built hardware keeps the surface of the desk rock solid during use.

heirloom project

Craftsman-Style Tool Cabinet 42

This classic tool cabinet features great looks and top-notch storage. But it's the woodworking techniques you'll learn while building it that will stand the test of time.

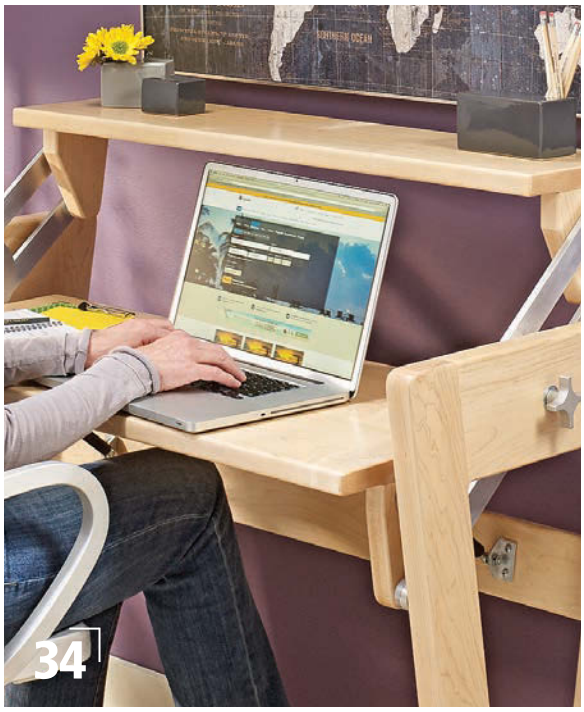

Departments

from our readers
Tips & Techniques 5

all about
Polyurethane Finish 10

router workshop
Router Table Setup Secrets. 12

great gear
New Gear & Gadgets 14

woodworking technique
Custom Molding Made Easy 16

working with tools
Track Saw Ripping Techniques . . . 56

in the shop
Great Glue Options 58

woodworking essentials
Small Shop Workflow 60

mastering the table saw
Tough Cuts Made Easy 62

tips from our shop
Shop Notes. 64

from our readers

Tips & Techniques

Edge Banding Helper

The task of edge banding doesn't have to be done every day. But when it comes up, usually there's a lot to do. I often just clamp the panels in the vise. But longer parts are often difficult to balance in the jaws of the vise. So I made a pair of simple holders that lets me quickly put all my focus on working the edge, not wrestling the panel.

As the drawing shows, each holder is made of two identical brackets that are held together with a hinge. The brackets don't have to grip the panel too tightly, just enough to hold it steady while you work. To keep the workpiece from being marred, I glued scraps of felt to the jaws of each holder.

As you can see in the inset photo, simply slide the panel between the jaws. The weight of the panel resting on the edge of the base closes the jaws to secure the panel.

Erich Lage
Des Moines, Iowa

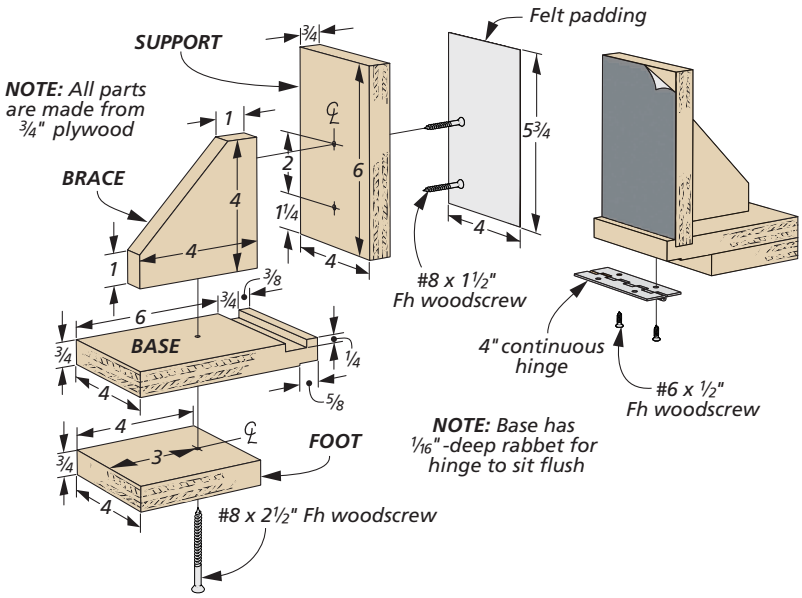

Win This Forrest Blade

Simply send us your favorite shop tips. If your tip or technique is selected as the featured reader's tip, you'll win a *Forrest Woodworker II* blade. To submit your tip or technique, go to *SubmitWoodsmithTips.com*. There you can upload your tips and photos for consideration.

The Winner!

Congratulations to Ken Johnson, the winner of this *Forrest Woodworker II*. To find out how you can win this blade, check out the information at left.

Standoffs for Finishing

Finishing shelves can be a time-and-space consuming process. To take a big bite out of both those problems, I made some T-shaped standoffs.

The trunk of the T is narrower than the shelf for the sake of applying finish all the way to the edge without buildup (inset photo). After finishing one side of the shelf, just flip it to finish the other side. And you can stack them safely on top of one another while the finish dries.

Dan Martin
Galena, Ohio

Extend a Clamp

A modest budget for my shop tools always challenges me to come up with creative ways to stretch my tool purchases. In this case, stretching worked out very well — literally.

The large quick clamps (with detachable heads) that I recently added to the shop can easily be extended to almost twice their length. By removing the sliding heads, you can join the two clamps with a standard 3" butt hinge.

The pins at the ends of the clamps fit into the outer screw holes of the hinge. A nut and bolt through the center hole of the hinge ties the two clamps together.

Michael Schwanke
Cottage Grove, Minnesota

QUICK TIPS

Get a Grip on Clamps. *Ramiro Salinas* of *Albuquerque, NM*, wraps the handles of his clamps with rug traction tape purchased from a home center. The thick tape stays put, lasts a long time, and provides plenty of grip to make it much easier to tighten or release the clamps.

Storage Bin Labels. *Bryan Nelson* of *Altoona, IA*, keeps his hardware in order using plastic bins. By sliding plastic laminate in the slot on the front, he can clearly label the contents with a marking pen. If the contents change, all it takes to erase the label is a little denatured alcohol.

▲ Drill a shallow hole with a Forstner bit at the start and stop locations. Use a bit that's slightly larger than the groove.

▲ To start the groove, place the hole in the board over the bit (inset photo) and hold it firmly in place while turning on the router. Then rout the groove until you come to the hole at the opposite end of the piece. Turn off the router and wait for the bit to stop.

▲ Stopping the groove means less work when putting the boxes together. You'll have no holes in the sides to fill.

Revisiting Stopped Grooves

Doing stopped cuts on the router table is a great way to cut the concealed grooves that hold box bottoms. But lowering a board on a spinning router bit has always made me nervous. So I came up with a process that I'm more comfortable with.

It starts at the drill press, where I drill a hole in either end of the groove location in the workpiece, as shown in Figure 1. This gives me a pre-cut starting and stopping position, as you can see in Figure 2.

You can mark the leading and trailing edge of the bit on the fence if you like. Or clamp stop blocks to the fence if the pieces aren't too long. But after doing multiple boxes, I found it easy to listen to the sound of the bit. It changes in pitch when it enters the pre-drilled hole and is no longer cutting wood.

Stan Calow
Kansas City, Missouri

Old Saw Helper. *David Bragg* of *Ormond Beach, FL,* uses his flush-cutting saw a lot in his shop. Several of the teeth were bent from dropping the saw. Instead of buying a new saw, he tapped the teeth flush with a hammer. He then placed a layer of tape on the underside of the saw. This lifted the blade just enough to prevent scratching the surface without adding much work to sanding the plugs flush.

DIGITAL WOODSMITH

SUBMIT TIPS ONLINE

If you have an original shop tip, we would like to hear from you and consider publishing your tip in one or more of our publications. Jump online and go to:

SubmitWoodsmithTips.com

You'll be able to tell us all about your tip and upload your photos and drawings. You can also mail your tips to "Woodsmith Tips" at the editorial address shown on page 2. We will pay up to $200 if we publish your tip.

RECEIVE FREE ETIPS BY EMAIL

Now you can have the best time-saving secrets, solutions, and techniques sent directly to your email inbox. Just go to:

Woodsmith.com
and click on,
"Woodsmith eTips"

You'll receive one of our favorite tips by email each and every week.

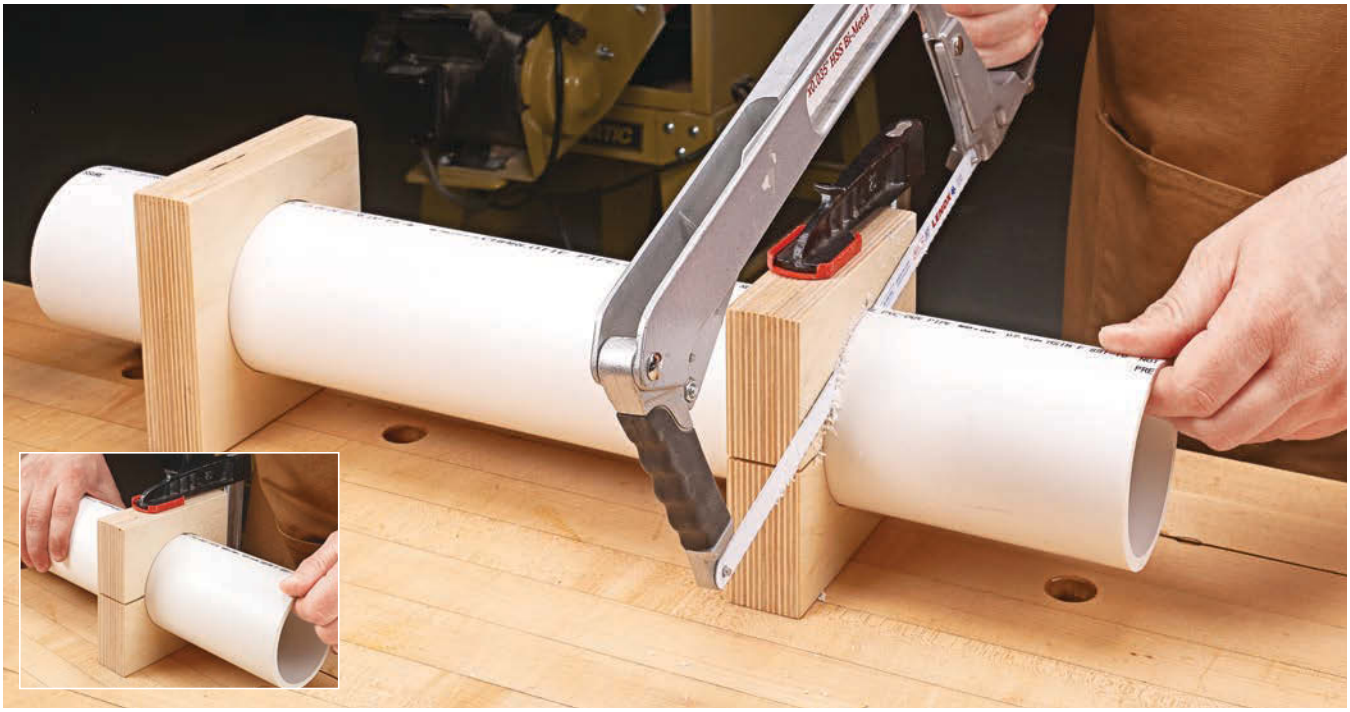

Pipe Cut-Off Guide

Recently, I installed some 4"-dia. PVC drain pipe in my shop for a dust collection system. To get tight-fitting joints, I needed to cut the pipe ends squarely. I came up with a simple idea to do this that works with pipe of all sizes.

A SIMPLE SETUP. Using my drill press and a wing cutter, I cut a hole in a block same size as the diameter of the pipe that I was going to use. (You could also use a jigsaw to rough out the hole, then file and sand it to its final shape.)

BLOCK BASICS. As you see above, I made the blocks from two pieces of plywood glued together. I made two of these blocks — one to support the far end of the pipe, and the other to guide my saw blade while making the cut. To get a good grip on the pipe, I cut a slot in the guide block and clamped the pipe in place on the top of my workbench, the inset photo shows this.

I use a hack saw to cut the pipe, keeping the saw blade flush with the guide block. You can also use a Japanese *Ryoba* saw. It will also ride against the guide block and leave a smooth cut in the PVC.

Francis Herzing, Jr.
Lincolnton, North Carolina

QUICK TIPS

Fence Ties. *Dave Rodman* of *Minot, ND,* uses aluminum fence ties that he bends into custom shapes for hanging molding and picture frames while they dry. They can also be reshaped with pliers for many uses around the shop. The ties store easily until they're needed again.

SAE & Metric Conversion Table. *Min-Hao Kuo* of *East Lansing, MI,* created a conversion table in a spreadsheet program to quickly find the equivalent fractions, decimals, or millimeters. He then made custom-sized charts as needed. He stores a copy with his calipers to aid in drill bit sizing.

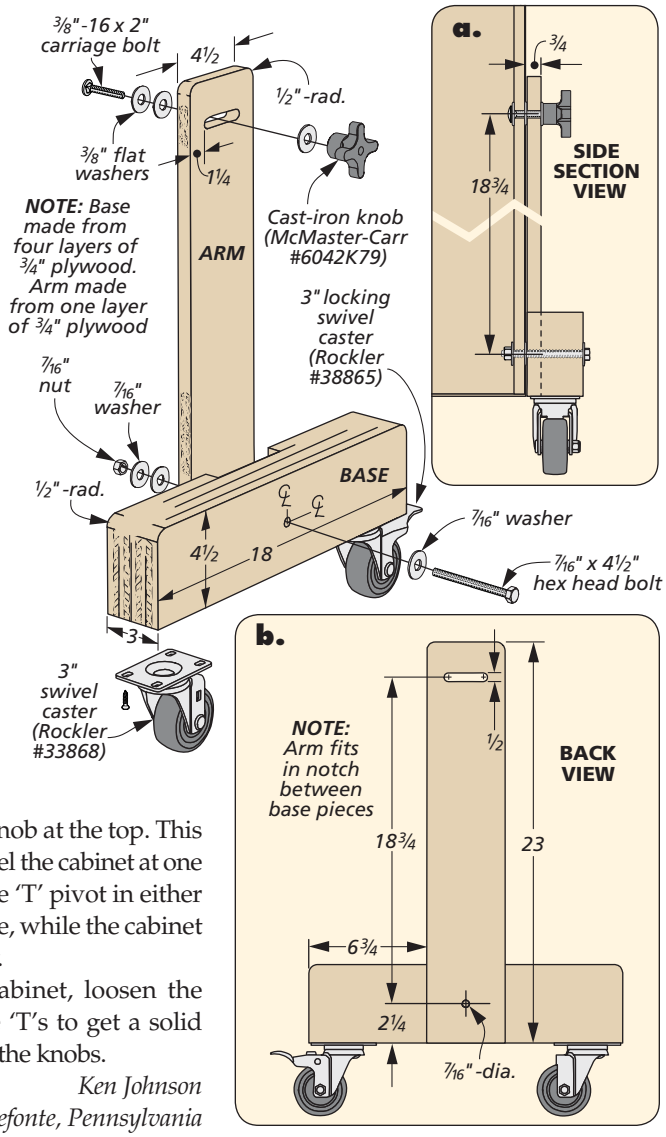

Leveling Casters

Many of the tools in my shop are mounted on casters for mobility. But I often have an issue with a tool rocking back and forth because the casters don't rest evenly on the floor. So I came up with a way to quickly level the casters.

As you can see in the photo above, I made a set of upside down 'T's with casters. I mounted them to the side of the cabinet using a single bolt at the bottom and an adjustment knob at the top. This lets me move and level the cabinet at one time. The bolt lets the 'T' pivot in either direction on each side, while the cabinet floats independently.

To stabilize the cabinet, loosen the knobs and pivot the 'T's to get a solid footing, then tighten the knobs.

Ken Johnson
Bellefonte, Pennsylvania

Workbench Trash Collection. For a quick cleanup, *Len Urban* of *Rancho Mirage, CA,* attaches a trash bag to the end of his workbench. Two binder clips screwed to the bench hold a wood slat and the bag in place. When finished, he empties the bag in preparation for the next task.

Extend the Life of Sandpaper. When flattening the backs of chisels, *Michael Goodwin* of *Springville, IN,* extends the life of his sandpaper by placing a rare-earth magnet in a baggie and running it over the surface. He then turns the bag inside out to discard the filings.

all about

choosing & using Polyurethane

Here in the *Woodsmith* shop, we finish the majority of our projects using a catalyzed lacquer delivered via a commercial sprayer. Of course, many people lack the space, ventilation, and equipment to create this type of finish.

For home woodworkers, often the best finish for their projects is a varnish. Varnish offers protection and durability comparable to commercial lacquer finishes, but in a formula that's easy to apply in a home shop. And of the varnishes available, far and away the most common you'll find is polyurethane.

As you peruse the aisles at the home center, you've no doubt noticed that there are many different types of polyurethane. You'll find the standard cans of "brushing" polyurethane, wipe-on polyurethane, spray polyurethane, as well as various formulas and sheens. It can all be a little overwhelming at times. What follows is the process I employ for choosing and using the right type of polyurethane finish for my own woodworking projects.

WHAT IS POLYURETHANE?

Before we get started, however, it's important to understand what exactly polyurethane is. Polyurethane is a form of varnish, which is a type of finish that forms a protective layer on the top of wood. But polyurethane has several properties that put it a cut above other forms of varnish and has essentially made it the varnish of choice for most woodworkers.

One easy way to understand polyurethane is that it's essentially a can of liquid plastic, made up of a mixture of oil and resin. As the polyurethane dries, it becomes an actual plastic coating. The chains of resin molecules bond tightly with one another as they dry to form a durable, impact-resistant finish. This makes polyurethane quite adept at resisting damage from heat, water, scratches, and other obstacles that your wood might run into.

OIL OR WATER?

Polyurethanes are available in both oil- and water-based formulas (left photos). They both work well, are close in viscosity, and get applied similarly to one another whether you choose a brush-on, wipe-on, or spray finish (more on these

▲ Getting good results with traditional polyurethane requires sound brushing techniques. Tilting the brush at an angle allows you to release a smooth, even line of polyurethane onto the surface. Scuffing the dried finish slightly preps the surface for another coat (inset photo).

options later). But there are certainly some differences in the oil- and water-based products that are worth noting.

Oil-based polyurethane tends to be more durable than water-based. It imparts a warm, amber tone that's desirable to many woodworkers (lower left photo, previous page). However, it gives off more odor as it cures and takes longer to dry. To apply the brushed variety, you'll need a natural bristle brush, which is more expensive. It also requires cleanup with mineral spirits after use.

Water-based polyurethane has less odor and dries more quickly. It also offers easier application with synthetic brushes and cleans up with water. As you can see in the lower left photo on the previous page, the finish doesn't give the wood much color, which can be off-putting on certain species. The water in the finish also may raise the grain of wood and requires sanding between coats to prevent a rough surface from forming.

BRUSH, WIPE OR SPRAY?

Another consideration with polyurethane is whether you want to choose a traditional polyurethane that's applied with a brush, a wipe-on polyurethane that's applied with a rag, or a spray polyurethane that's applied right out of the can (upper right photo). As I mentioned earlier, each variety comes in an oil-based or water-based formula.

Traditional, brush-on polyurethane is the thickest option and usually provides excellent coverage with just two to three coats. But applying it takes some good brush form and finesse to prevent runs and drips in the finish (photo above). It also requires a light sanding between coats to remove dust nibs and to prepare the surface for another coat of finish, as shown in the inset photo above.

Wipe-on polyurethane is essentially just traditional polyurethane thinned with mineral spirits so you can apply it with a rag. It's easier to apply without runs and drips, as shown in the photo at right. But it takes five or six coats (or more) to "build" a good finish with the same level of protection as a traditional polyurethane.

Spray polyurethane is a great choice for small projects or irregularly shaped items (refer to the main photo on the previous page). You apply it much like spray paint, starting slightly off the surface of the wood and then making smooth, overlapping passes. Subsequent coats can also be applied within two hours to speed up the finishing process.

WHAT'S YOUR SHEEN?

A final consideration related to choosing a polyurethane finish is the sheen, or glossiness, that you want for your project. Typical choices are gloss, semi-gloss, and satin (right photo). This is largely a personal preference, but you'll want to be aware that glossier finishes are more likely to show imperfections than satin finishes.

▲ Wipe-on polyurethane is thinner than regular polyurethane. It's less likely to produce runs and drips on vertical surfaces.

As you can see, virtually every form of polyurethane has value for your woodworking projects. The right choice really comes down to the nature of the project and the look that you're after. W

5 time-saving Router Table Tips

The router table is one of my favorite tools in the shop, mainly due to its sheer versatility. Whether I need to shape decorative profiles on project parts or form complex joinery on pieces, it's always up to the task.

▲ This gauge makes quick work of accurately setting the bit height for different depths of dadoes, grooves, or rabbets.

Of course, all that versatility does come with one drawback: I often find that I spend more time fussing with setups — making bit changes, setting the bit height, adjusting the speed controls and fence settings, etc. — than I do actually routing my workpieces.

While some of this work, such as switching bits for different profiles, is inevitable, there are a number of things that you can do to speed up the setup process. Here are a handful of the time-saving tips and tricks I've come up with through the years. They've helped my process and techniques become more efficient, as well as accurate, when working at the router table.

[1] Profile Setup Blocks

A lot of my work at the router table involves routing decorative profiles on parts — roundovers, chamfers, ogees, and the like. And I often go back to the same profiles over and over again.

To save time in this process, I made some setup blocks. These are just scraps of wood that have common profiles routed on each edge and labeled. With these blocks in hand, you can set both the bit height and the fence in one easy step, as shown in the photo above.

[2] Stepped Depth Gauge

One of the biggest headaches that I have with my router table is getting the bit height set just right. Due to the opening in the router table around the bit, there's no good way to get a ruler right up to the bit to measure the height accurately.

To solve that problem, I made a stepped setup gauge. As you can see in the photo at left, it has a series of rabbets routed to the depths of my common cuts. This makes a quick and easy method of setting the bit height. You just place the desired "step" above the bit, and raise the bit until the end just grazes the bottom face of the step.

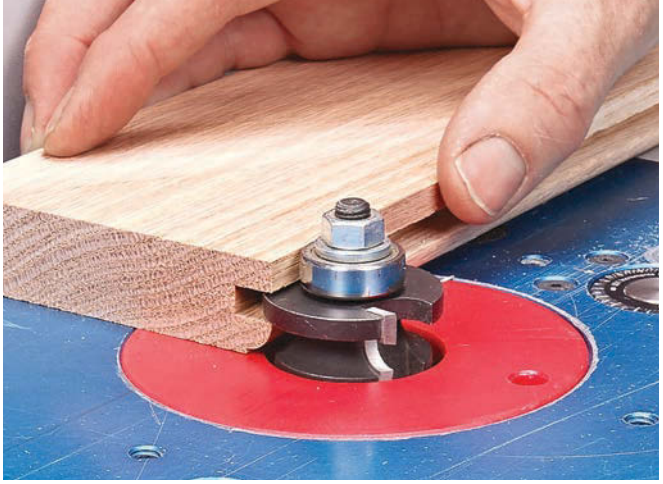

By keeping a scrap piece with an accurate profile already cut on it (the "sticked" cut of a cope and stick joint, in this example), you can make quick work of setting the bit the next time you use it.

I make cuts on the ends of parts by backing them up with a miter gauge auxiliary fence. If you keep this fence after making a cut (such as this "coped" cut), it also makes a handy setup block.

[3] Joinery Helpers

I create a lot of joinery like cope and stick door joints or locking miter joints at my router table, as well. Many of these joints require routing the mating parts with two separate router bits. As you can imagine, it can take a lot of trial and error (as well as lots of test cuts) to get a good fit between parts with these bits.

Luckily, the same concept of using setup blocks discussed earlier is also handy here. Once you get the setting of the router bit dialed in just right, rout the profile of the joint on a scrap block. Then label the cut and the thickness of the workpiece on the block, and stash it away with the mating cut in a drawer. (Hold them together with rubber bands.) You'll have an easy setup for the next time you need to make the cut, as shown above left.

[4] Auxiliary Fences

For profile or joinery cuts on the ends of workpieces, I like to use a miter gauge auxiliary fence with adhesive-backed sandpaper to back up the cut and hold the piece perpendicular to the router bit. Another simple trick for these cuts is to cut all the way through the auxiliary fence once you get set up properly, and then label and save it for future cuts. Now you have a handy setup gauge for subsequent cuts that already has pre-drilled holes for easy installation on your miter gauge (upper right photo).

[5] Spacer Blocks

I sometimes like to cut dadoes and grooves on small parts at the router table rather than the table saw because router bits leave a flatter bottom than dado blades. But if the dadoes or grooves are not a standard dimension, such as for plywood, this can be challenging. The answer is a spacer planed to the extra width of the dado or notch and then clamped to the router table fence. Make the first cut with the spacer in place, then remove it before making the second pass, as shown below. W

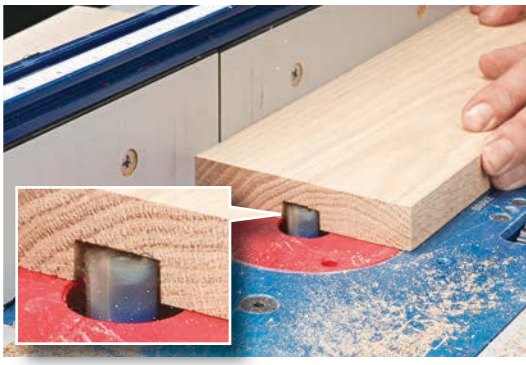

By using a scrap spacer clamped against the router table fence, it's easy to form wide dadoes or grooves in two passes.

Easy Upgrade: AUXILIARY SWITCH

Sometimes, the simplest additions to your router table can be the most helpful. And that's the case with an auxiliary switch. If you ever get tired of stooping down to flip on the router motor underneath the table, then this is the accessory for you. The switch mounts to the side of the table to make turning the router off and on super-simple. Plus, it enhances safety at the router table by putting the switch in easy reach if needed.

Simply plug the router cord into this auxiliary switch to turn the router off and on without straining your back.

great gear

new Gear & Gadgets

Workshop solutions come in a variety of forms, from power tools, to accessories and handy jigs. The new gear shown on these pages provides a good example. Moreover, these problem solvers come from established tool manufacterers as well as up-and-coming makers. For sources, turn to page 67.

ROCKWELL SANDER

A random-orbit sander serves as an unsung workhorse in most shops. However, the force of a spinning disc sanding wood often creates a good deal of vibration. More than likely you've experienced the side effects — a tingling or numb hand. To counter these forces, *Rockwell's VibraFree* dispenses with the single sanding disc in favor of an inner disc and outer ring, as in the upper left photo. The discs rotate in opposite directions to dramatically reduce vibration.

DUST COLLECTION. The other interesting feature of the sander is its method for collecting sanding dust. Rather than use a cartridge or fabric bag, a rigid canister attaches to the back end. The canister is shaped to create a cyclonic rotation in the airstream so the dust settles without any loss in airflow as the canister fills. It's similar to the systems on several household vacuums.

DUAL DISCS. By now, you've probably figured out the hitch in this arrangement — the discs. The sander requires

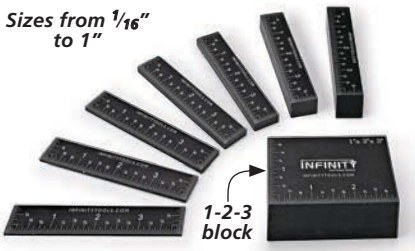

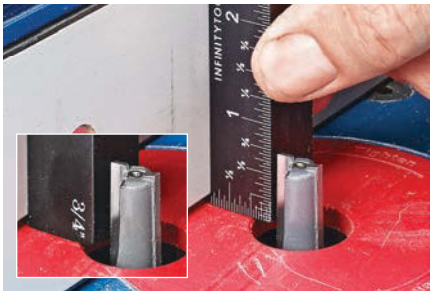

▲ Setup blocks are ideal for positioning a router table fence. *Infinity's* blocks include a scale for measuring, as well.

▲ The *Dado Stop* simplifies the process of cutting custom-sized and snug-fitting dadoes at the table saw.

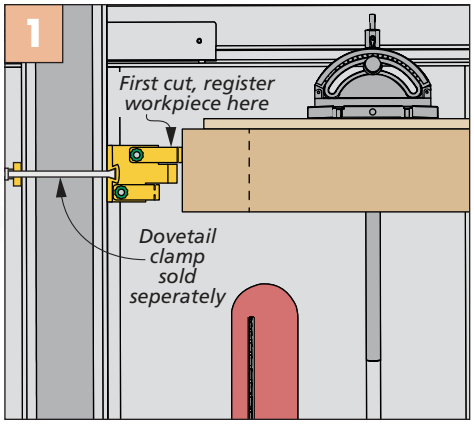

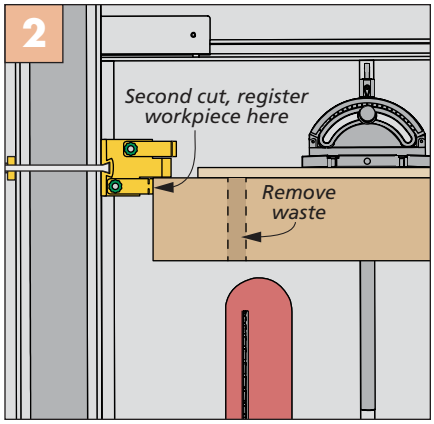

proprietary two-piece discs. However, with online ordering, keeping a good selection on hand is straightforward.

INFINITY SETUP BLOCKS

Hand in hand with good layout, accurate machine setup helps get your projects off on the right foot. One solution to setting up bits and blades is to take a page from the machinist's playbook and use setup blocks to physically gauge height and fence settings.

Infinity Cutting Tools has taken the concept and given it their own spin. The set (shown on the previous page) includes six aluminum blocks (1/16", 3/32", 1/8", 3/16", 1/2", and 3/4") along with a 1-2-3 block. You can mix and match these for setting bits, saw blades, and fences. A scale printed on one side of the blocks turns them into measuring tools, as in the right photo on the previous page.

MICROJIG DADO STOP

Cutting perfect-fitting dadoes can be an exercise in frustration — and a lot of test cuts. *MicroJig's Dado Stop* (upper left photo) aims to streamline the process.

Long story short, the stop clamps to the rip fence on the table saw and features two adjustable legs.

Calibrate one leg to the width of the blade installed in the saw. You can use a single blade or dado stack. The other leg is set using the workpiece (or an offcut) you plan to fit into the dado.

These two stop positions allow you to cut the outside edges of the dado (drawings above) with two cuts. After that, depending on the size of the dado, all you need to do is make additional passes to remove the remaining waste.

T-CLAMP

Some projects call for a different clamping approach than what standard bar clamps provide. That's where the *T-Clamp* comes in. Rather than apply clamping pressure from both ends of an assembly, the *T-Clamp* pinches the side of one of the mating parts in order to get a tight grip on the piece.

This comes in handy if the assembly is longer than your clamps, like the table shown in the upper right photo. It's also ideal for joining curved or angled components where it would be tough to get a solid grip with typical bar clamps.

▲ When an assembly is longer than your bar clamps, the *T-Clamp* can still get a solid grip to draw parts together.

The clamp consists of two stout aluminum jaws joined by a screw and two guide rods. The adjustable jaw incorporates a pair of side-clamping screws with wide pads to get a secure grip. The fixed jaw has a large wing knob to apply clamping pressure to hold parts together.

KREG DRAWER SLIDE JIG

Metal drawer slides offer a great upgrade for a drawer but can be tricky to install accurately. A jig can simplify the process. *Kreg Tool's* latest version of a drawer slide jig packs a lot of features into a pair of mirror-image brackets. The photos at left show how it works for installing the cabinet portion of the slide. You can flip the jig around to install the drawer portion, as well.

The jig works on frameless and face frame cabinets and accommodates most types of drawer slides, from epoxy-coated slides and side-mounted ball-bearing slides to under-mount slides. W

▲ Clamp the drawer slide bracket to the case side. Rest the drawer slide on top while you drive the screws in place.

▲ Flip the drawer bracket around to support the drawer box to install the other portion of the slide with perfect alignment.

diamond Relief Molding

Whenever I see a piece of furniture with beautiful carving that was obviously done by hand, I always marvel at the artistic ability of the person that created the work. In my own woodworking, however, I've often been intimidated by the idea of adding carved details to any of my projects. But while building the tool cabinet featured on page 42, the idea for a simple molding treatment with a diamond-shaped relief seemed like the perfect place to test the carving waters, so to speak.

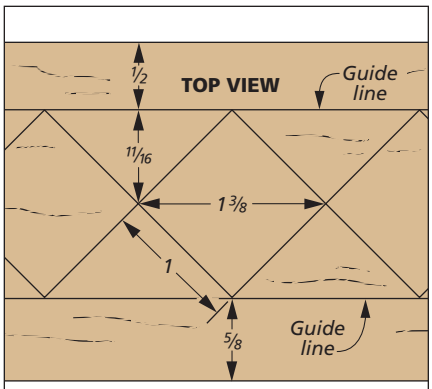

NOTE: *The molding blank for the tool cabinet is 2½" wide*

SIMPLE IS BETTER. The best thing about this diamond-shaped design is that for a beginner, it only requires a couple of different techniques to create. And neither one demands that you be a master artisan to get quality results.

One other feature that I like about this method is that the carved molding is applied to the cabinet after the carving work is done. This allows you to do the work at the bench with the workpiece clamped in a comfortable working position. Plus, it alleviates some of the fear of making a mistake and spoiling the entire project.

CAREFUL LAYOUT. The key to success for this diamond-shaped design is close attention to detail when laying out the pattern. For the three pieces of molding that wrap the top of my cabinet, the front piece is the focal point.

The goal is to end up with either a whole diamond at both ends of this piece or, as was the case with my project, a half diamond, as you can see in the bottom right photo on the next page. It's then easy to lay out the side moldings to match the front piece.

It just so happened that the piece of molding that spans the front of my tool cabinet needed to be 35" long. So I used the dimensions shown at left to establish the points of the diamond design down the length of my molding blank.

After using a ruler to mark the diamond points, switch to a combination square to draw the diagonal lines from one guide line to the other. This defines the area to be carved.

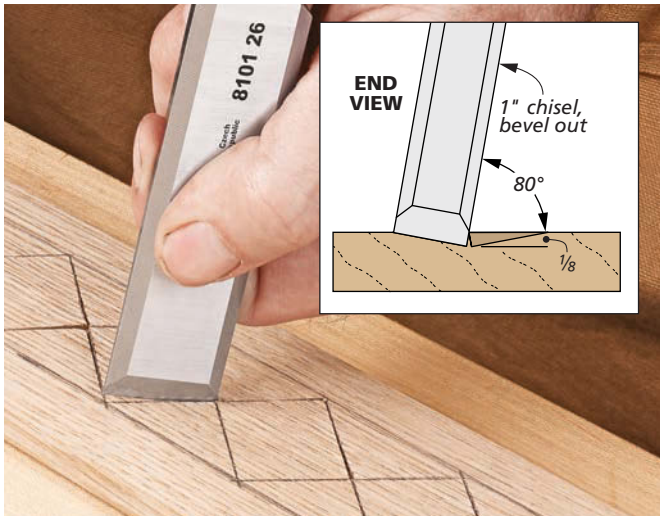

To define the edges of each diamond, tilt the chisel as shown and give the handle two or three light taps. As the inset shows, you only need to drive the corner of the chisel down 1/8".

You may need to adjust the size of the diamonds if your workpiece varies. With the layout marks completed, switch to a combination square to complete the layout by drawing the diamond pattern (upper left photo).

Once the diamond pattern is layed out on the workpiece, you'll want to select a chisel that most closely matches the length of the side of the diamond. In my case, this was 1".

ANGLED CHOPPING CUTS. The technique I used to define the edges of the diamonds is shown in the upper right photo. With the bevel of the chisel facing away from the diamond, position the corner of the chisel at the intersection point. Slightly tilt the chisel and give it two or three light taps with a mallet. You're only looking to go down 1/8" at the intersection point, while the other corner of the chisel is just touching the layout line (inset).

To keep moving in a smooth pattern, I found it best to work my way down one side of the blank first. This makes it easy to reposition the workpiece and make the cuts down the other side of the board. You'll quickly pick up a rhythm after the first few strokes.

WHERE TO CARVE. You'll notice in the main photo on the opposite page that the material to be removed is actually the triangular-shaped area formed between the diamonds and the guide lines. This is where you'll taper down the material to the intersection point of the diamonds.

PARE THE WASTE. With the initial cuts made to define the edges of each diamond, you'll now move to the next step — removing the waste. The trick here is to not try to remove all of the waste in one paring motion, but rather take short, graduated cuts. The left drawing below shows what I mean.

Again, the chisel is held at a slight angle to the workpiece to make the angled paring cut (left inset below). After each slice is removed, move the chisel back (about 1/4") for the next cut, as shown in the right inset. Once you've worked up to the guide line at the top of the slope, turn your chisel 90° and pare from the other direction to finish cleaning up each triangle. Continue along the workpiece to complete each section. It's then just a matter of mitering the corners and attaching the molding to your project.

Don't let tackling a new skill like carving intimidate you. Just keep in mind to start small and keep the objective simple. You're sure to get great results. W

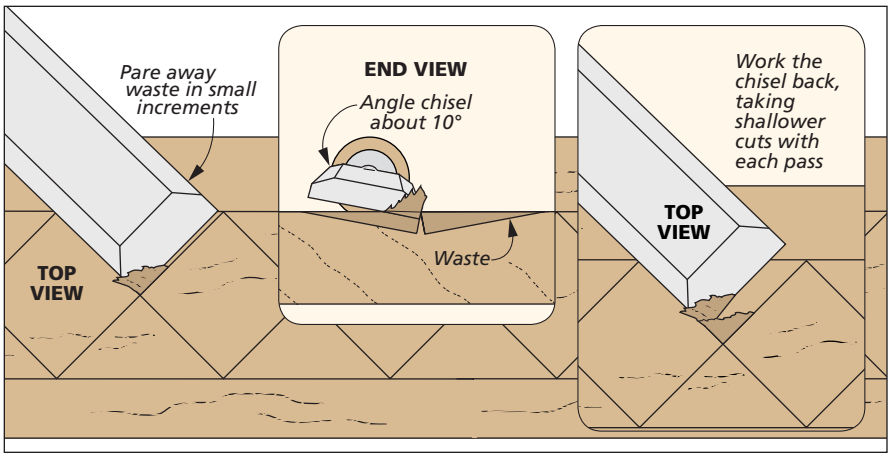

The completed molding installed under a cap creates a striking detail at the top of the tool cabinet.

Weekend Project

Smartphone Amplifier

This clever project boosts the sound coming from your smartphone. And all it takes is a little creative work at the band saw.

Whether I'm out in the workshop or in the house, more than likely there's music playing from my smartphone. And while the speakers on smartphones have improved over time, the sound coming from them doesn't project very well.

However, with a little shop time, you can create an amplifier like this one. The unique design dramatically increases the volume coming from the speaker located on the bottom of the phone. A tapered opening in the top of the amp accepts most phone models, even with a case.

BAND SAW SKILLS. Of course, if you're going to build a project, it's nice to hone some woodworking skills along the way. For this project, you'll spend some quality time working with your band saw. Even though the amp is small, making it involves resawing thick boards into thin parts, making accurate rip cuts, and cutting smooth, flowing curves.

In order to give the amp a unique look, I incorporated "inlay" strips in a contrasting material. But instead of recessing the strips in a shallow groove, the blank is cut apart and the strips are sandwiched in between (drawing on the next page).

A THICK BLANK

The starting point for the project is making a thick blank. If you have access to lumber this size, a single-piece blank is a great option. But it isn't always easy finding thick material — especially when you only need a small amount. Figure 1 shows the three-layer assembly I used to create the blank. A ⅜"-thick top and bottom sandwich a thick center piece.

Gluing up the three pieces isn't difficult. It does pay to spend a little time in selecting pieces that have similar color and grain patterns. The glue seams practically disappear with some extra attention spent aligning the grain when you glue the parts together.

MAKE INLAY STRIPS. You can make the inlay strips while waiting for the glue to dry on the blank. Begin by ripping material to match the thickness of the blank. Over at the band saw, resaw the

boards into thinner pieces that are long enough to yield five inlay strips, as you can see in Figure 2. Complete the strips by planing them to final thickness (Figure 3) and cutting them to rough length.

CENTER CUT FIRST. With the inlay strips in hand, you're ready to start cutting the blank apart. To simplify the layout, I used a paper pattern. I began by making the straight center cut and installing one inlay strip, as in Figure 4. The square, flat surfaces left by this cut allow you to get the hang of the glueup process without having to deal with curves at this point.

Speaking of the surfaces, the key here is making the saw cut in a continuous pass. Combined with a sharp blade, the surface is smooth enough that I found sanding unnecessary. Once the glue and inlay strip are added, the results are tight joint lines, as shown in Figure 5.

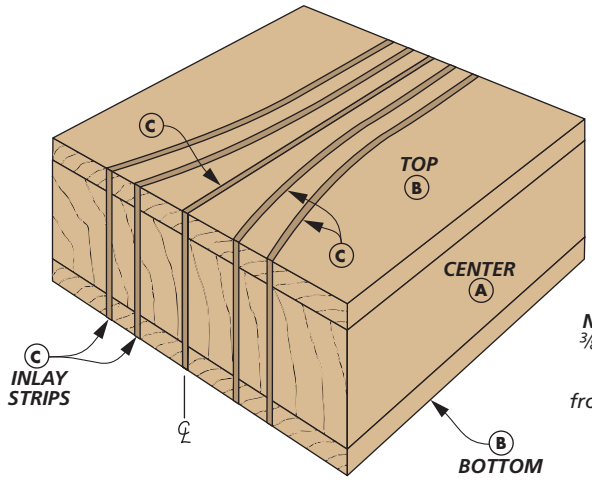

NOTE: Top and bottom are 3/8"-thick hardwood. Center is 1 3/4-thick hardwood. Inlay strips are resawn from a contrasting hardwood and planed to 1/8" thick

Woodsmith GO ONLINE EXTRAS

To print full-size patterns, go to Woodsmith.com

SLICE & REPEAT. After removing the clamps from the first glueup, you'll just repeat this process for the other strips. The only difference for the remaining cuts is that you follow along the pattern making a curved cut, as in Figure 6. It's tempting to cut and glue more than one inlay strip at a time. However doing so increases the number of small parts that are difficult to keep aligned.

Work your way out from the center strip. Once the last inlay strip has been glued in place, it's time to transform the blank into the amplifier.

How-To: CREATE AN INLAID BLANK

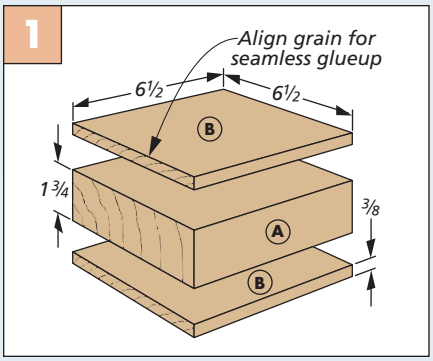

Three-Part Blank. A thin top and bottom sandwich a thicker center piece to create the body for the amplifier.

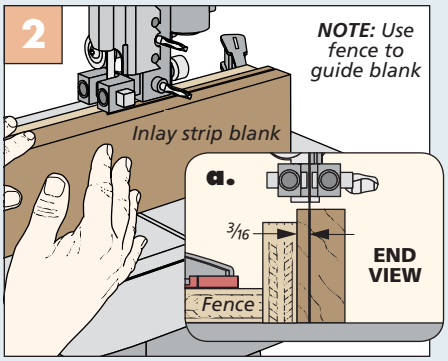

Thick to Thin. Resaw a board to create two inlay strips. Cut the strips slightly wider than the final thickness.

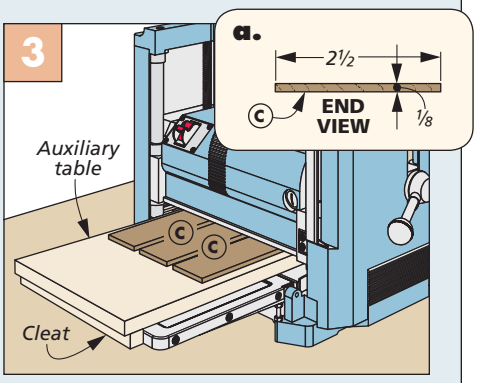

Final Thickness. An auxiliary table allows you to plane the strips to final thickness safely and accurately.

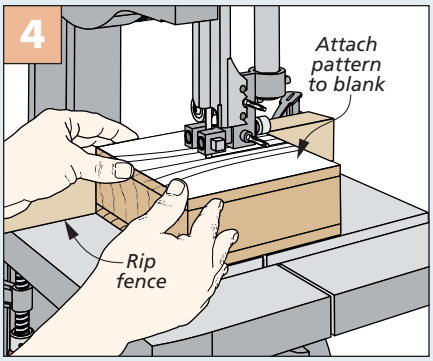

Center Kerf. Use a paper pattern to set a rip fence and cut the blank in half to accept the first inlay strip.

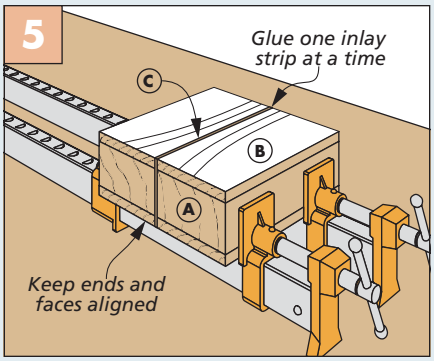

Glue & Clamp. Apply glue to the strip and blank. Be sure to keep the parts aligned as you tighten the clamps.

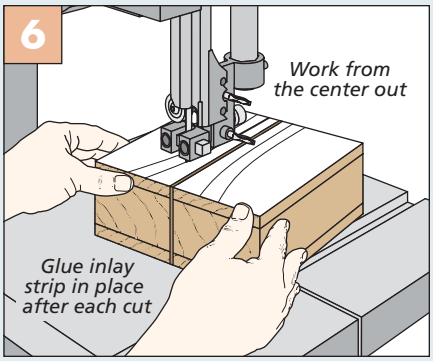

Curved Strip. Cut the first curved line in a fluid, even pass for the smoothest result. Sanding isn't necessary.

Boosting the **SOUND**

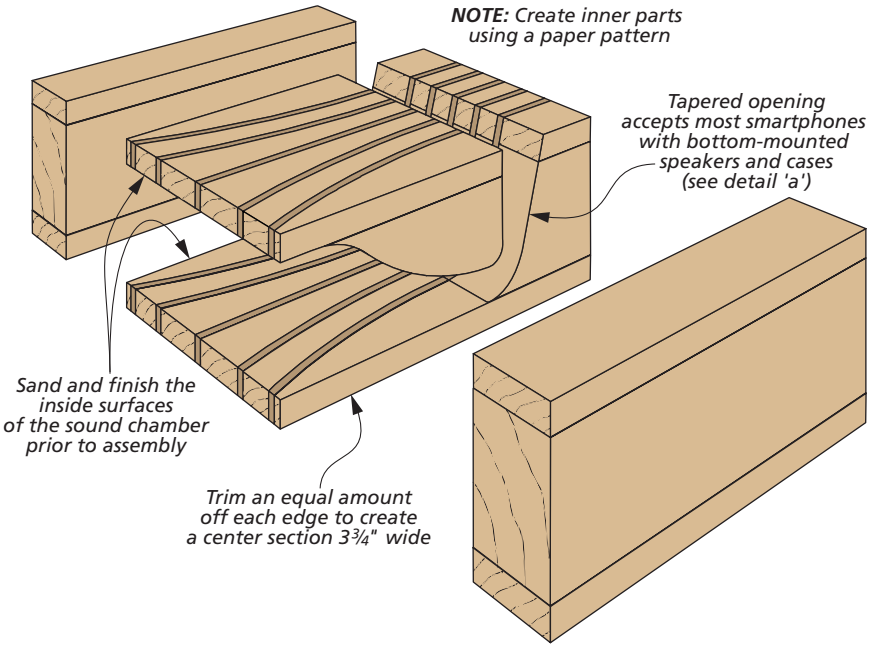

Adding the inlay strips involved quite a bit of cutting, gluing, and clamping. That work continues here, just with a different purpose. Your focus turns now to the functional part of the amplifier — shaping the sound chamber. The drawings at right show you where you're headed while the box below highlights the steps required to get there.

THE CENTER SECTION. The opening for the phone and the sound chamber that amplifies the music from the speaker occupies the center of the blank. A few cuts at the band saw allow you to do this. The first step is separating the center section from the sides, as in Figure 1.

A smooth surface transmits sound better. So unlike the earlier cuts, I sanded the inner surfaces of the sides that form part of the sound chamber.

As you can see in detail 'a,' an irregular shape forms the sound chamber. Once again, I used a paper pattern (available at *Woodsmith.com*) as a guide. Attach the pattern to one side of the center section and cut just on the waste side of the lines, as shown in Figure 2.

PREFINISH. Once you've shaped the upper and lower portions of the sound chamber, it's a good idea to sand and finish the inner surfaces. Like I said, it helps to get the best sound possible from the amplifier. I sprayed several coats of gloss lacquer on these surfaces. Apply masking tape to the edges of the these two pieces to avoid gluing problems later.

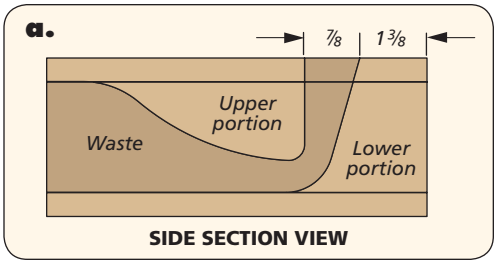

Don't forget to apply finish to the inside of the side pieces. To do this, position the center pieces on each of the sides and trace their profile onto the sides. Then mask off the glue surfaces and erase your lines before spraying on a couple coats of lacquer.

THE FINAL GLUEUP. It's time to get out the glue bottle and clamps one last time. There are four parts to manage here.

How-To: SHAPE THE SOUND CHAMBER

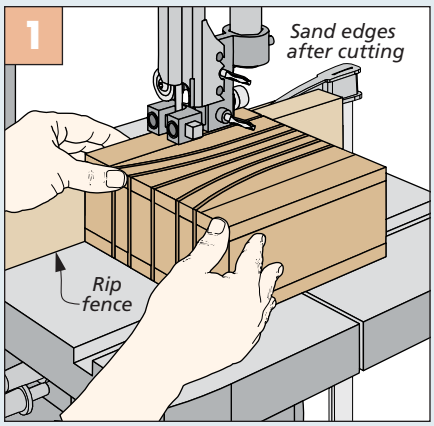

Straight Rip Cuts. Trim away each side of the blank, leaving a center section that's 3¾" wide.

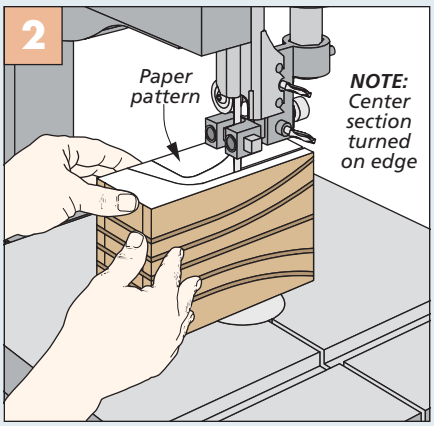

Curved Cuts. Follow a pattern to create the tapered opening and sound chamber on the center section.

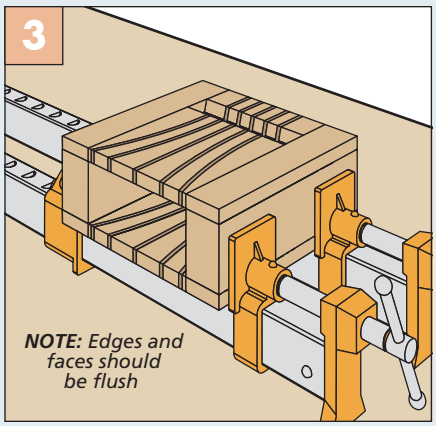

Glue It Up. After prefinishing the inner surfaces, glue and clamp the amp blank back together one last time.

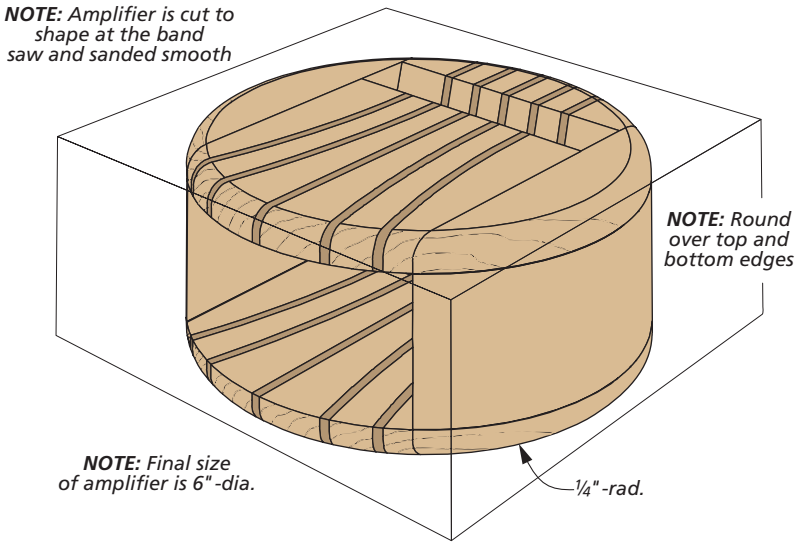

Materials, Supplies & Cutting Diagram

A	Center (1)	1¾ x 6½ - 6½
B	Top/Bottom (2)	⅜ x 6½ - 6½
C	Inlay Strips (5)	⅛ x 2½ - 6½

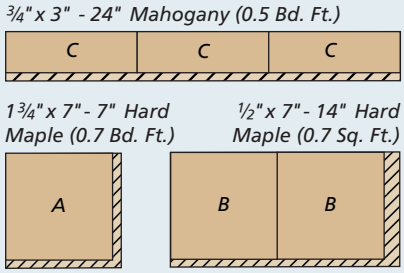

NOTE: Resaw parts 'C' to ⅛" thick. Parts 'B' planed to ⅜" thick

While it may seem that the center pieces would be tricky to keep in the correct orientation, the answer is straightforward. All you need to do is keep the ends and upper surfaces of the parts flush as you apply the clamps, as illustrated in Figure 3 on the previous page.

FINAL SHAPING

The home stretch on the amp involves creating its final shape. This shape can be whatever you choose to make it. I opted for a simple circle for a compact, pleasing look, as in the drawing above.

After smoothing the upper and lower faces, locate the center of the amplifier and draw a circle using a compass. I made the marks on the bottom face so the dimple left by the point of the compass wouldn't be visible (Figure 1 below).

CUTTING A CIRLE. After all the band saw work done to this point, you should be pretty comfortable cutting around the circle, as shown in Figure 2. The key is making the cut in a smooth, steady pass. Try to avoid stopping and starting, which leaves lumps and bumps that are more difficult to sand away.

With a steady hand, a disc or belt sander makes quick work of cleaning up the blade marks left by the band saw. Use the layout line as a general guide. I've found that I can track down uneven places by feeling the surface with my fingers. Finish up with some hand sanding to leave a smooth surface.

ROUT A ROUNDOVER. For the final construction step, head over to the router table and shape a roundover on the upper and lower edges (Figure 3).

A small project like this offers the ideal opportunity to use a spray can finish. In contrast to the sound chamber, I applied a couple coats of satin lacquer to the outside. (Be sure to mask off the inside.) The fast drying time means it won't take long before you'll have this accessory sending out your favorite tunes. W

How-To: MAKE IT ROUND

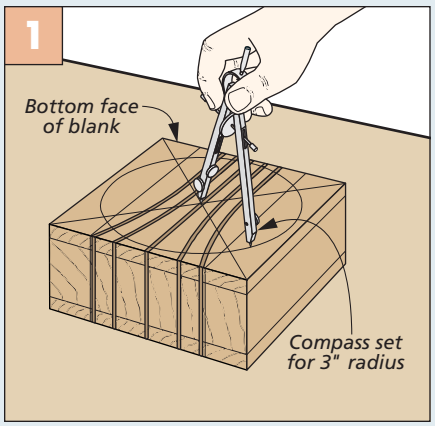

Layout Work. Draw diagonal lines to find the center of the blank and mark the final size with a compass.

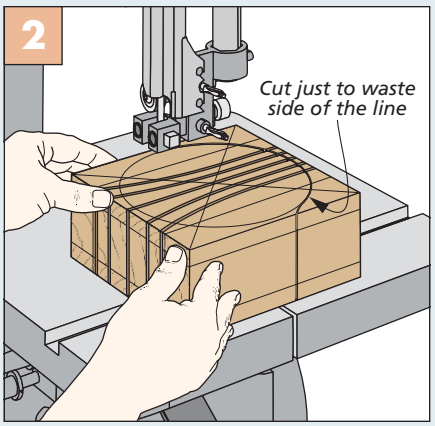

Rough Cut & Sand. Cut close to the circle in order to minimize the amount of sanding you need to do.

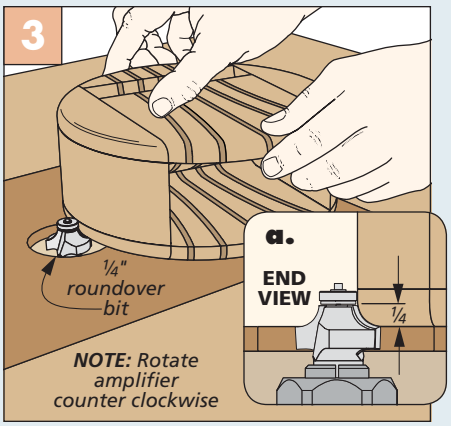

Roundover. A gentle roundover eases the edges. After a final sanding, the amplifier is ready for finish.

Shop Project

Shop-made Wood Threading Jig

In the pursuit of making a set of perfectly matched internal and external wood threads, this efficient and flexible jig delivers the goods.

When it comes to cutting threads in wood, there are a variety of pre-made threading kits available to purchase. Most of them are pretty pricey and they don't offer much in the way of making large threads. But we've come up with a shop-made system that hits a stand-up double of cost savings and the ability to create large threads. It's also a perfect solution for creating the threads used in the canister on page 30.

The jig is a little like a lathe that's been pulled inside out. Attached to one end of the base is a router that's held in place by a carriage. Opposite the router is a platen carriage that's made up of two halves. These halves close around a length of *Acme* threaded rod. Epoxied to the end of the threaded rod is an assembly called the platen. You'll do all the thread cutting — internal and external — with your parts attached to this platen.

As shown in the photo above, once the platen assembly is locked into the carriage, it's slowly rotated by hand into the spinning router bit. The feed rate is controlled by a key that tracks along the threads of the threaded rod. If it sounds complicated, don't worry. It will become clearer as you move through the process.

BASE INFORMATION

To get the ball rolling, I started by making the base and building the fixed half of the platen carriage. As you can see in the main drawing on the next page, the base is made of a couple of layers of MDF to add stability. A series of holes in the base provides mounting points for all of the jig parts. You can lay out and drill these holes before moving on.

FIXED CARRIAGE. Returning the focus to the fixed half of the platen carriage, it's made up of a base, a brace, and two cradles. (Later, you'll make and add the other half of the platen carriage.) And although I'm calling this half of the carriage "fixed," it can be mounted to the base in one of two positions, depending on the length of the workpiece you're threading. Figure 1 shows information on making the cradles. Assemble the fixed carriage with screws. Once done,

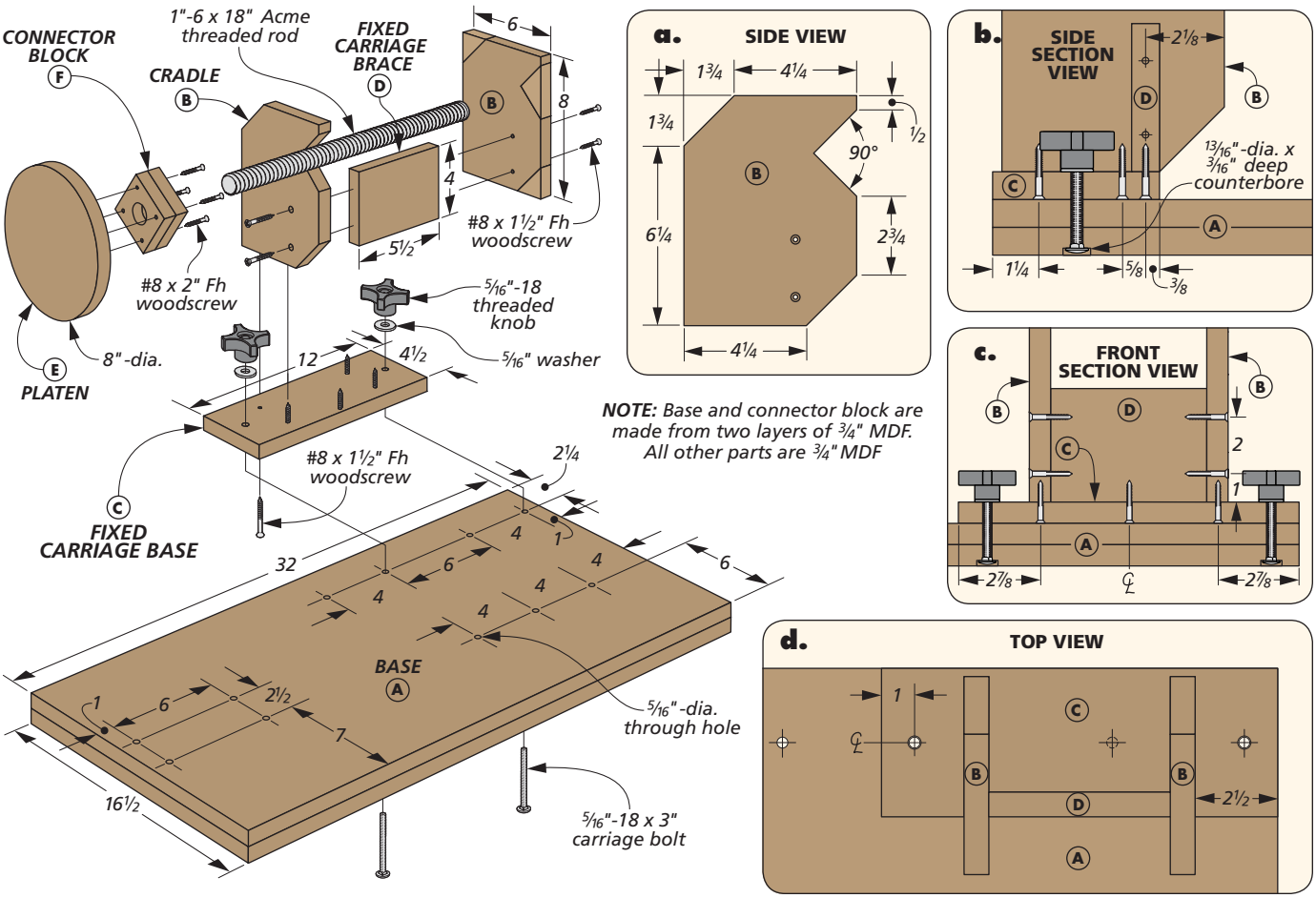

NOTE: *Base and connector block are made from two layers of ¾" MDF. All other parts are ¾" MDF*

it's attached to the base with carriage bolts and threaded knobs.

PLATEN PARTICULARS. Coming back to the platen I mentioned briefly in the beginning, it's the heart of this whole operation. Combining the platen with the threaded rod, as shown in the main drawing above, takes some work that's not particularly difficult. But it needs to be exact since it's the key to making a set of good-fitting threads.

To make the platen, I started with a square piece of MDF. After drawing center lines on both sides, I cut out the platen at the band saw, as Figure 2 shows. The connector block is made up of two layers of MDF. It's centered and fastened to the back of the platen (Figure 3). When that's finished, it's just a matter of gluing the threaded rod squarely into the platen with epoxy.

How-To: MAKE THE CRADLE & PLATEN

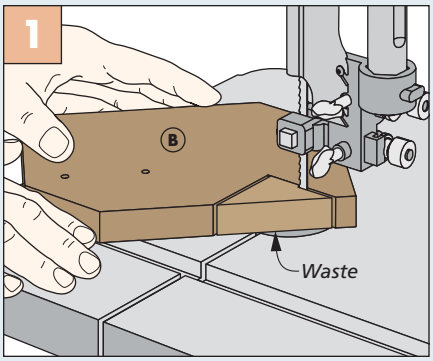

Cradle Notches. The notches that hold the threaded rod, and the other large bevels, are cut at the band saw.

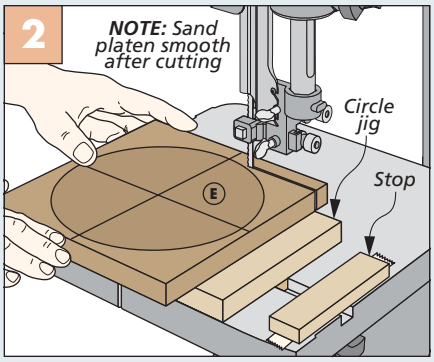

Cut Platen at Band Saw. To shape the platen using this circle cutting jig, refer to Shop Notes on page 65.

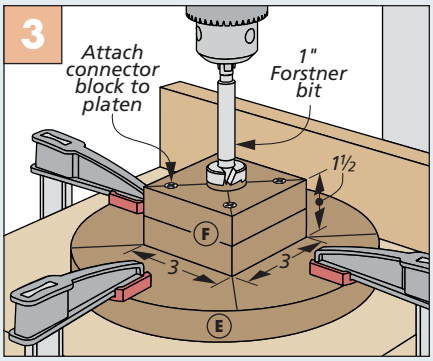

Drill Connector Block. Attach the connector block to the platen. Drill the hole through both connector blocks.

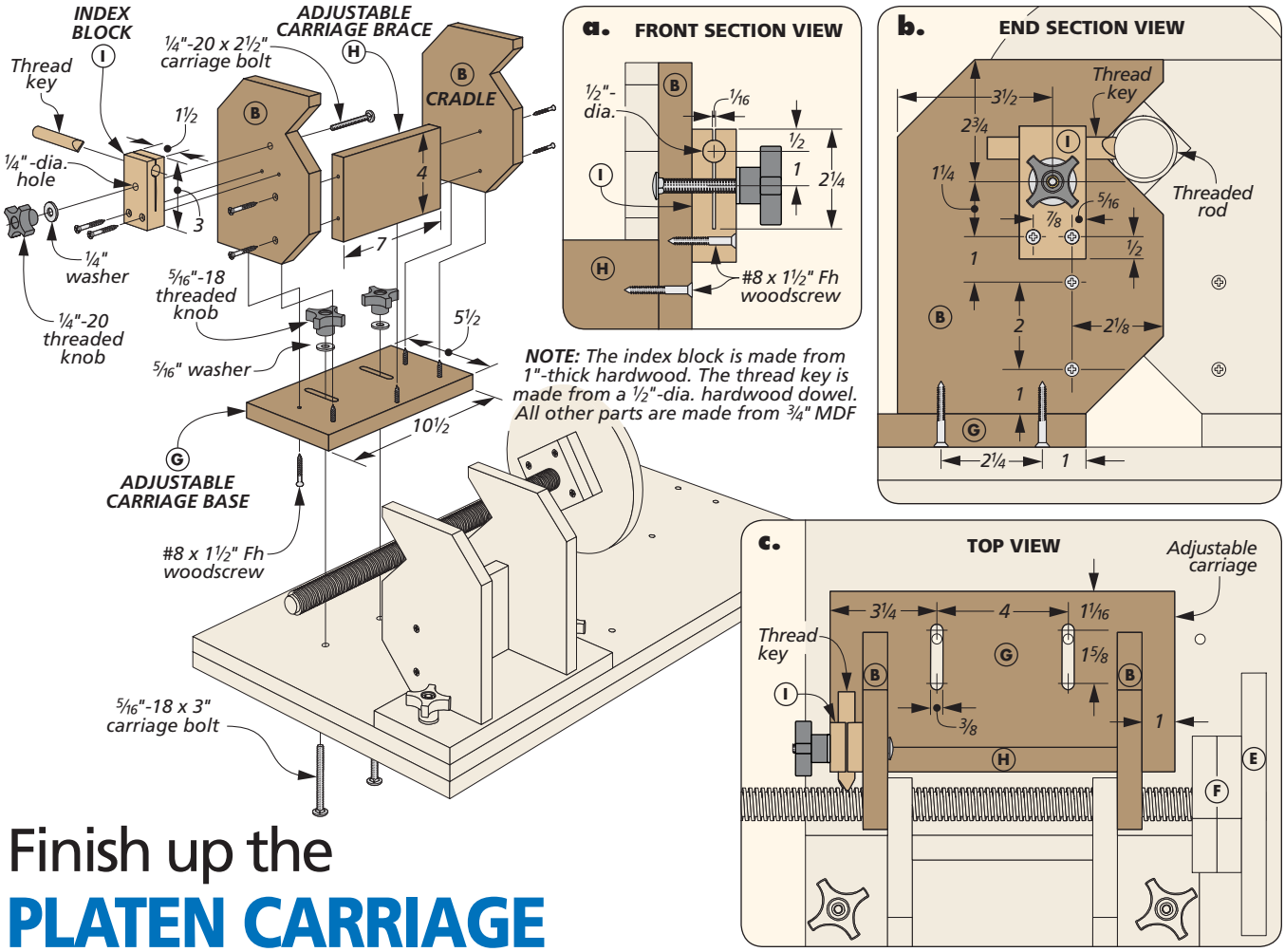

NOTE: The index block is made from 1"-thick hardwood. The thread key is made from a 1/2"-dia. hardwood dowel. All other parts are made from 3/4" MDF

Finish up the PLATEN CARRIAGE

With the base and fixed half of the platen carriage and the platen assembly finished, you can now add the adjustable half of the platen carriage. This is the part that you loosen to remove or adjust the threaded rod that's attached to the platen. It's different from the fixed half in several ways that are clear in the details. First, the cradles on the adjustable e carriage are set wider apart to straddle the cradles on the fixed carriage. It also has an index block attached to the end.

INDEX BLOCK. The index block is a hardwood block that holds a thread key. A quick look at detail 'c' above shows what the thread key does. When you align the key with the threads on the threaded rod and lock it in place, you can then advance the platen into the router in a manner that's consistent and repeatable.

Details for making the index block are shown in the box at left. As for the thread key, it's simply a short length of dowel stock with one end shaped to ride in the threads of the rod. The tip needs to be narrow enough that it doesn't bind on the sides of the threads. Details 'b' and 'c' shows this.

How-To: INDEX BLOCK

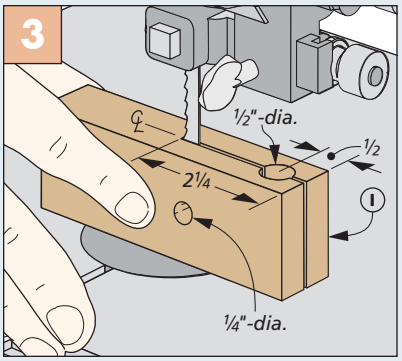

Cut Kerf in Index Block. The kerf in the index block allows you to lock the thread key in place.

ROUTER CARRIAGE

Now that the platen carriage is complete, you can turn your attention to the router carriage. This assembly holds the router motor and is adjustable in several directions. Since the platen only moves forward and back at a fixed height, it's the router carriage that does all the work to create the threads.

As shown in the main drawing on the next page, the slots in the base allow for adjustments in and out (detail 'b'). This gives you the ability to control the depth of cut when routing the threads. Attached to the base are a pair of brackets. These are slotted to allow for vertical adjustments of the router mount.

ROUTER MOUNTS. It's easy get a lot of work done with a router in short order, but managing the high speed vibrations that a router puts out required some solid mounts. The two halves of the mounts are glued up from three layers of MDF.

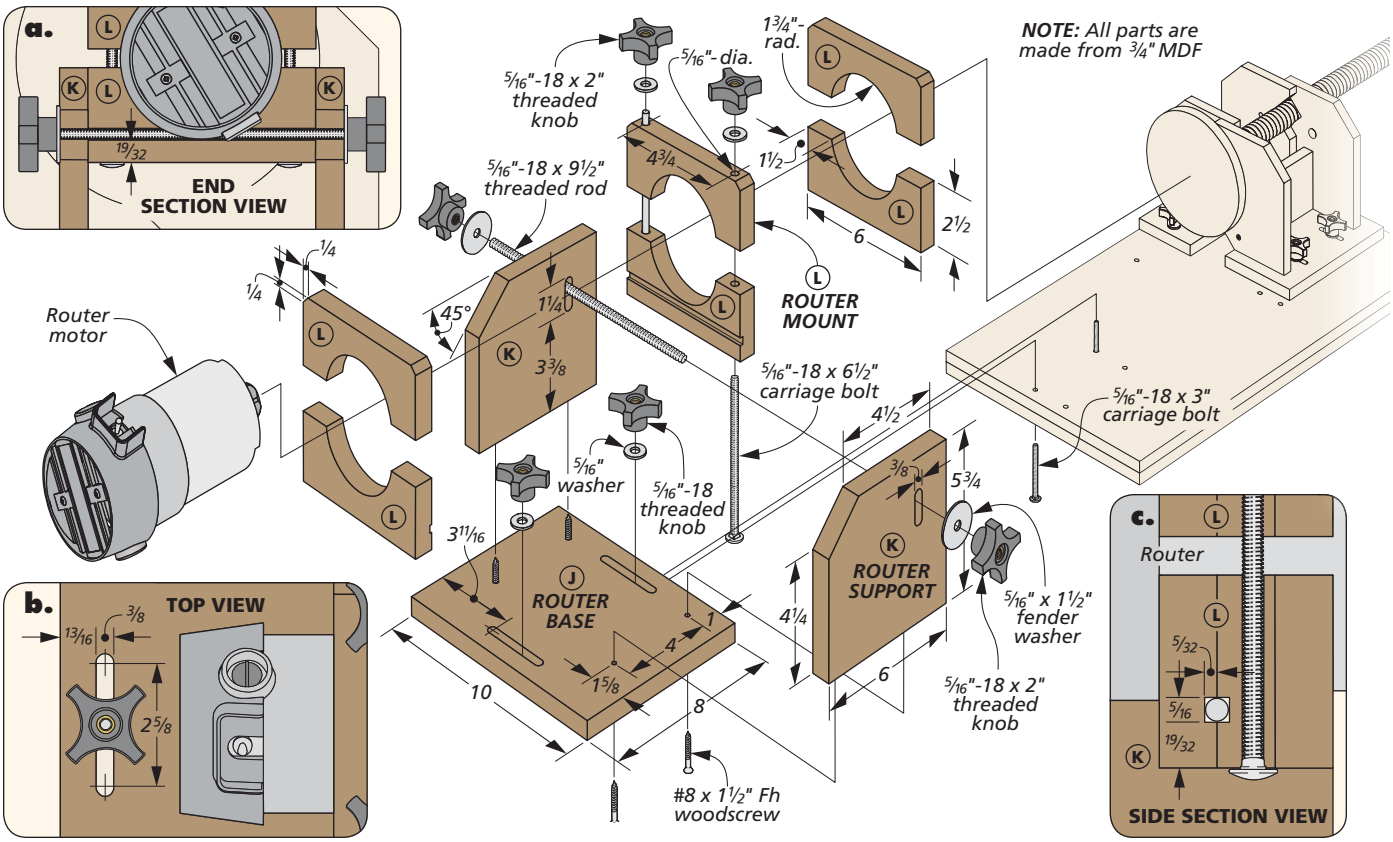

As well as maintaining a firm grip on the router, this component needs to allow the router motor to pivot to match the pitch of the threaded rod. The pivoting action is achieved by using another length of threaded rod that runs through the lower half of the mount (detail 'a').

To accommodate this rod, I cut a groove in the two rear pieces (Figure 1). A couple of carriage bolts hold the mount halves together. Detail 'c' above shows what I'm talking about. With all the milling done, and the mounts glued up, you can move on to the last step in creating the router carriage — the opening for the router.

The drawing above details the opening for the router I used. Ultimately, the size of the opening in the mount depends upon the diameter of your router motor. So you might have to increase or decrease the radius in your situation.

Figure 3 shows the best way to cut this opening. When you've completed the opening in the mounts, bolt them together using the hardware shown above. All that's left is to attach the mounts to the router supports. With the components built and installed, turn the page to learn how to make wood threads.

How-To: CREATE PARTS FOR ROUTER MOUNT

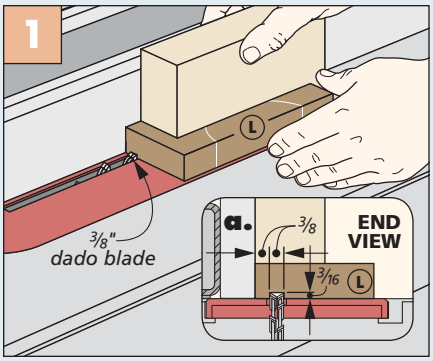

Groove for Rod. Cut a groove in the rear and middle sections of the lower router mounts for the threaded rod.

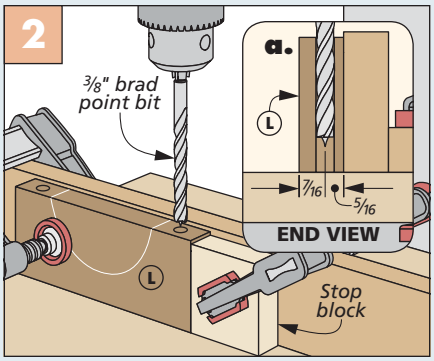

Router Mount Holes. The holes in the center router mount pieces are offset to avoid the threaded rod.

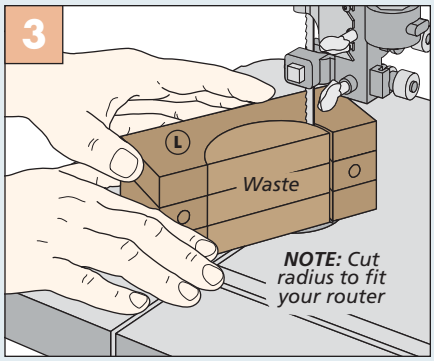

Half-Circles to Fit Router Body. At the band saw, cut a radius that matches the size of your router motor.

Cutting INTERNAL THREADS

With the jig built and assembled, you're almost ready to make some wood threads. The way the jig works is that you'll start by routing the internal threads. After those are cut, you'll use them to size the external threads.

All that's needed is to fine-tune a couple of things before you start. This involves setting the pitch on the router carriage and scribing the platen. But first, you'll want to install the router bit. This is a double-angled bit that you see in the photos to the right. Sources on page 67 show you where to find it. The whole process of creating internal threads is covered step by step in the box below and on the next page. I'm going to point out a few details of the process along the way.

▲ Cutting threads in hardwood requires several passes, otherwise you'll burn the threads. The inset photo shows how far to run threads into the canister. This more than covers the plug depth.

PLATEN CARRIAGE. The first step is to position both halves of the platen carriage on the base. This will be determined by the size of your workpiece. For the canister on page 30, I set these parts in the rear holes. Later, when you cut the external threads, you'll want to move both carriage halves to the front holes. Other than that, there are no more adjustments needed for the platen carriage. For the next step, you're going to momentarily install the platen assembly backwards to fine-tune several settings.

THREAD PITCH & HEIGHT. I mentioned earlier that the platen assembly was the heart of the operation. Here's where that will come to light. As Figure 1 below shows, you need to slide the threaded rod forward in the carriage to set the position of the router bit. This is a dual adjustment of matching the pitch and center of the bit to that of the threaded rod. Just loosen the two pairs of knobs holding the router to tilt and slide the router in place. Tuning the bit height and pitch is only done once. The setting remains the same for cutting both sets

How-To: ADJUST ROUTER & ATTACH CANISTER TO PLATEN ASSEMBLY

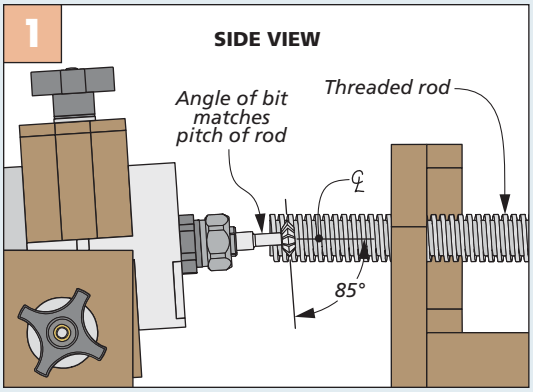

Set Height & Pitch of Bit. With the platen assembly installed backward, set the router height and angle to match the threaded rod.

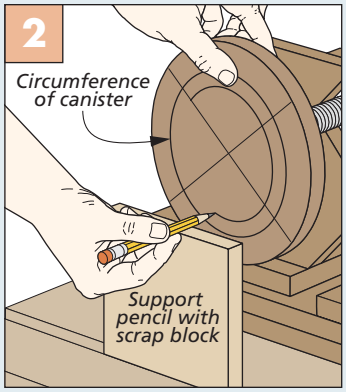

Scribe Platen. With a pencil, draw the circumference of the canister on the platen.

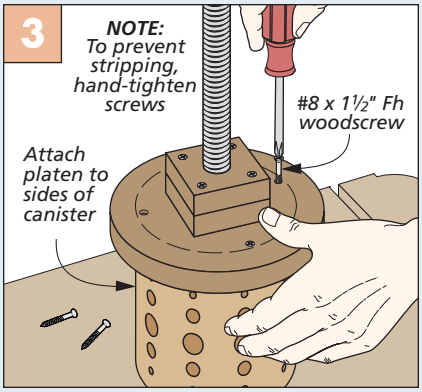

Attach the Canister. Center the canister on the platen assembly. Then attach it from the back side.

of threads, so take your time doing this. Tighten the router mounts once you've arrived at the proper setting.

SCRIBE THE PLATEN. The next step happens at the other end of the platen assembly while it's still backwards in the carriage. As Figure 2 on the previous page reveals, I used a pencil and a scrap of wood to scribe a couple of circles on the platen. One is the diameter of the canister, the other is a little smaller to help orient the plug later. With that done, take the platen assembly out of the carriage and attach the canister as shown in Figure 3.

INTERNAL THREADS

Just one more adjustment and you're ready to start cutting threads. This time when you put the platen assembly in the carriage, slide it forward so that it's close to the router bit. Then you can engage the thread key with the threaded rod. Figures 1 and 2 at right show the details.

DEPTH OF CUT. With the router carriage set to the pitch and height of cut, that leaves you with one final setting — depth of cut. Looking at Figure 3 gives you some insight on how this is done. Without changing the relative position of the router bit, simply slide the router carriage forward or back to adjust the depth of cut. If you're cutting hardwood, 1/16" is a safe depth to start with. For softwoods, you can go a little deeper than that. Until you get the feel for the process, plan on taking at least two passes to get the threads to the proper depth.

SAWDUST FLYING. Now it's time to turn on the router and start feeding the workpiece into the bit. Taking a look back at the main photo on page 22, you'll see that to feed the wood into the bit you just slowly turn the platen. When you've reached the mark for the bottom of your threads (inset photo, previous page), just back the platen and canister out away from the router. I did this with the router running to clean up any debris in the thread that I just made.

A properly cut thread will have a complete bottom and a pointed top, (Figure 4a). I lightly sanded the entry point and the crest of the threads before turning my attention to the external threads.

How-To: ROUT THE INTERNAL THREADS

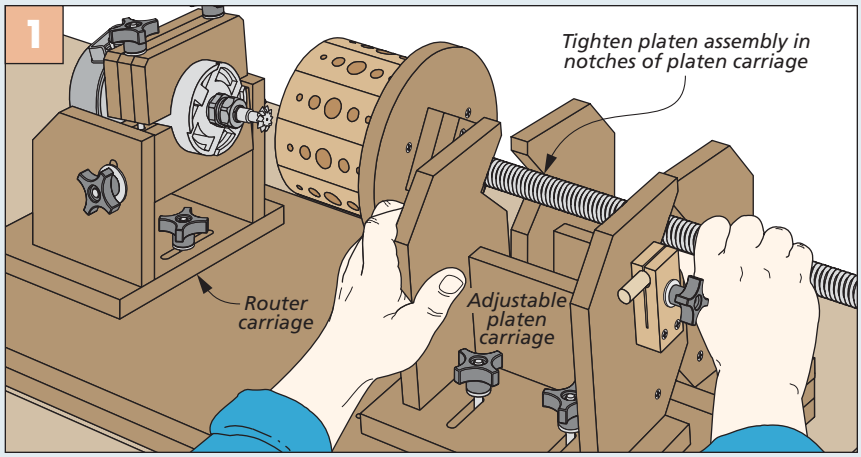

Install Platen Assembly. Loosen the adjustable cradle enough to drop the platen assembly in place. Hold the assembly in the center of the notch and tighten the carriage so the platen assembly turns without any wobble.

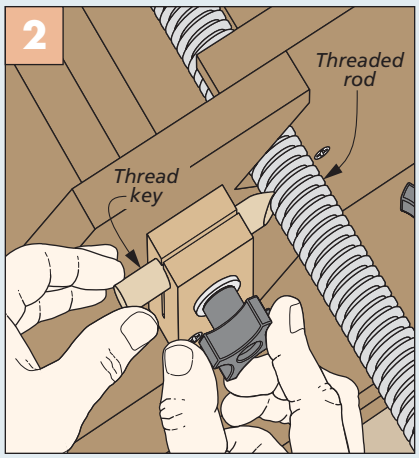

Align the Thread Key. Advance and turn the key so the tapered point fits into the groove of the threaded rod.

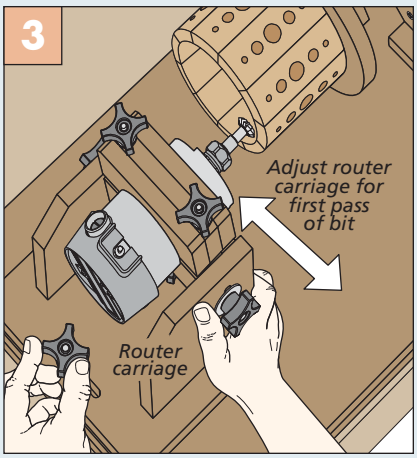

Router Carriage Adjustment. Adjust the router carriage to set the depth of cut for the first pass.

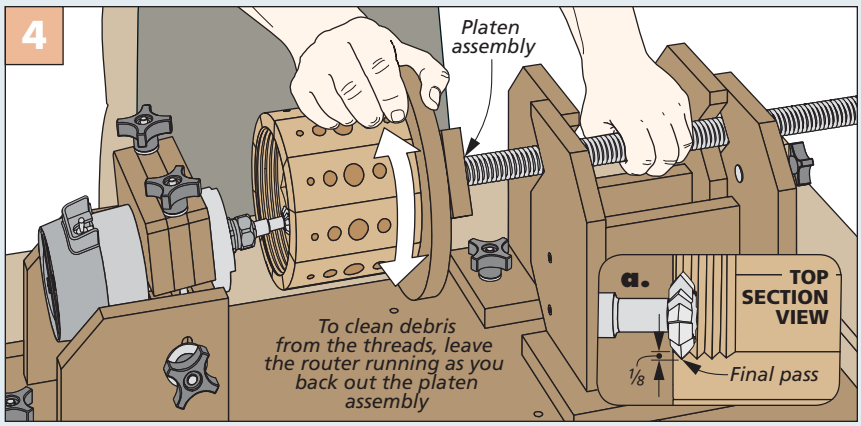

Routing Threads. To avoid burning the threads, make shallow passes and take your time when feeding into the bit. After each pass, back the platen assembly out and adjust the router carriage to increase the depth of cut.

Matching **EXTERNAL THREADS**

Finishing the internal threads are the halfway point in the journey. Now you'll use the jig to create the external threads that will mate perfectly with the internal ones. If you look at the drawing below you'll see a good example of what you're aiming for. The external threads are cut on a blank that's sized to match the internally threaded part.

PROPER FIT. As you can see in detail 'a' in the drawing below, the goal is to create a smooth fit between the sets of threads (taking into account a bit of wood movement). This isn't hard to do, it just means applying some patience while cutting the threads.

You're going to make shallow passes here like you did when making the internal threads. This is not only to avoid burning the wood, but to gradually sneak up on the fit of the threads. You can see all of this in action in the main photo above.

▲ Aligning the bit to the plug is the same process as the canister, except you're cutting on the opposite side of the workpiece (inset photo) Run the threads all the way along the edge of the plug into the backer.

Coming up with the size of the blank for the plug is the first order of business.

PLUG & BACKER. The starting size of the blank is derived from taking an opening measurement from the mating piece that you just threaded. As you measure across the opening, you need to account for the depth of the threads you've already cut. I added a total of 1/4" for my plug, which made the blank 5 1/2" in diameter.

With that information in hand, head over to the band saw and cut out two identical blanks. One will be the actual workpiece and the other will serve as a backer (inset photo above). This step is addressed in Figure 2 on the next page Adding a backer behind the workpiece allows you to cut the threads past the end of the plug without any blowout on the back.

SETTING UP THE PLATEN. You need to screw both pieces to the platen as shown in Figure 3. As before, you

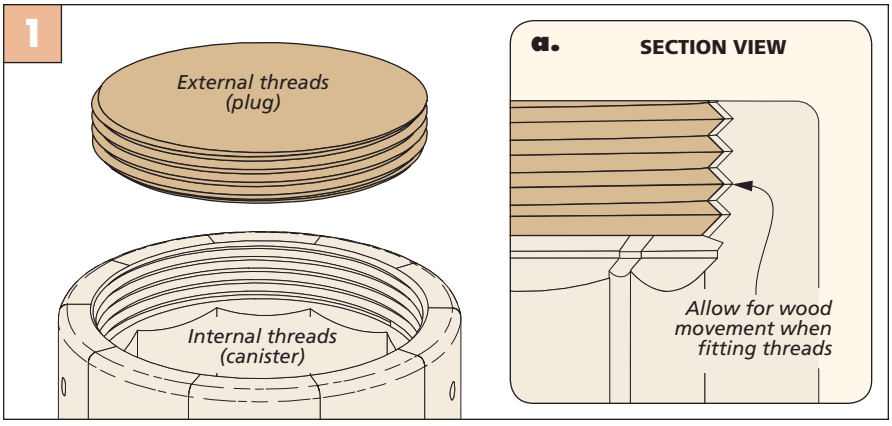

Materials & Supplies

A	Base (1)	1 1/2 MDF - 16 1/2 x 32	**J**	Router Base (1)	3/4 MDF - 8 x 10	•	(4) 5/16"-18 x 2" Threaded Knobs
B	Cradles (4)	3/4 MDF - 6 x 8	**K**	Router Supports (2)	3/4 MDF - 5 3/4 x 6	•	(6) 5/16"-18 x 3" Carriage Bolt
C	Fixed Cradle Base (1)	3/4 MDF - 4 1/2 x 12	**L**	Router Mounts (6)	3/4 MDF - 2 1/2 x 6	•	(2) 5/16"-18 x 6 1/2" Carriage Bolt
D	Fixed Cradle Brace (1)	3/4 MDF - 4 x 5 1/2	•	(4) #8 x 2" Fh Woodscrews		•	(1) 5/16"-18 x 12" Threaded Rod
E	Platen (1)	3/4 MDF - 8 x 8	•	(20) #8 x 1 1/2" Fh Woodscrews		•	(1) 1/4"-20 x 2 1/2" Carriage Bolt
F	Connector Blocks (1)	1 1/2 MDF - 3 x 3	•	(8) #8 x 1 1/4" Fh Woodscrews		•	(1) 1/4" Washer
G	Adj. Cradle Base (1)	3/4 MDF - 5 1/2 x 10 1/2	•	(8) 5/16" Washers		•	(1) 1/4"-20 Threaded Knob
H	Adj. Cradle Brace (1)	3/4 MDF - 4 x 7	•	(2) 5/16" x 1 1/2" Fender Washers		•	(1) 1"-6 x 36" Acme Threaded Rod
I	Index Block (1)	1x 1 1/2 x 3	•	(10) 5/16"-18 Threaded Knobs		•	(1) 1/2"-dia. Dowel

want to center these pieces on the platen using the smaller circle that you scribed earlier as a guide. I used four short screws to fasten the backer to the plug. Make sure to stay at least ½" away from the outer edge of the plug to avoid cutting into them with the router bit.

PLATEN CARRIAGE. One thing that needs to be done at this point is to move the platen carriage halves to the forward holes in the base. This is to account for the difference in length between the canister and the plug. When you've done that, you can set the platen assembly into the carriage and lock it in place.

Here's where you'll notice how clever this jig is. Since the calibration of the thread pitch and height was done before, all you have to do is slide the platen assembly forward to the bit like you did before. Take a moment to align the thread key to the threaded rod. This leaves you with the lone detail of setting the depth of cut that's shown in Figure 4. After that, it's time to fire up the router again.

CUTTING & FITTING. When you're feeding the bit into the plug, keep a firm grip on the platen. Since you're cutting on the opposite side of the workpiece, it has the effect of wanting to tear at the wood. This is an additional reason to proceed slowly (Figure 5). With this in mind, it's best to make several shallow passes. Then remove the assembly and test the threads by screwing the two pieces together (Figure 6). When the fit between the threads is to your liking, just unscrew the workpiece from the platen and the backers. W

How-To: SIZE & MAKE EXTERNAL THREADS

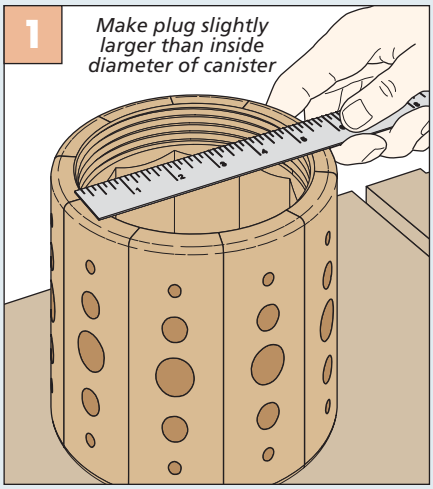

Sizing the Plug. Measure across the diameter of the canister. Account for the thread depth when doing this.

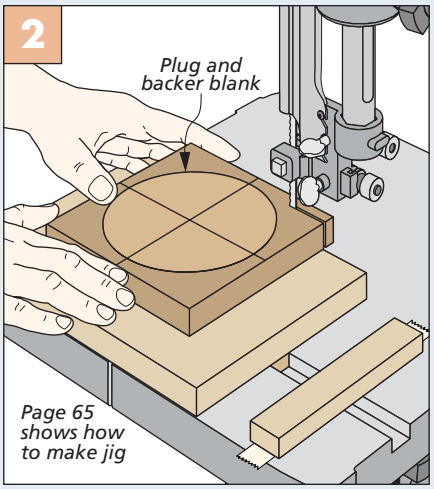

Cutting the Plug & Backer. The jig you made for the platen will work when cuting the plug and backer.

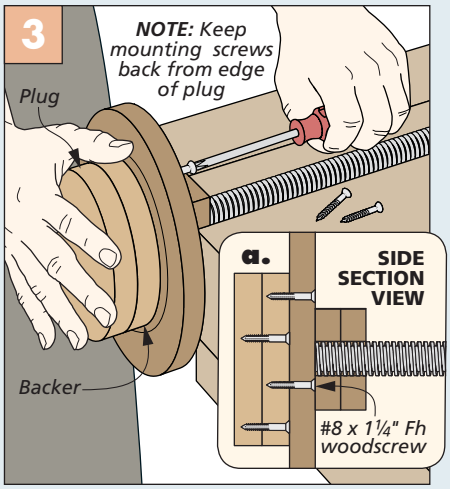

Attach the Plug. Center the plug on the platen and attach with screws. Use four screws in plug and backer.

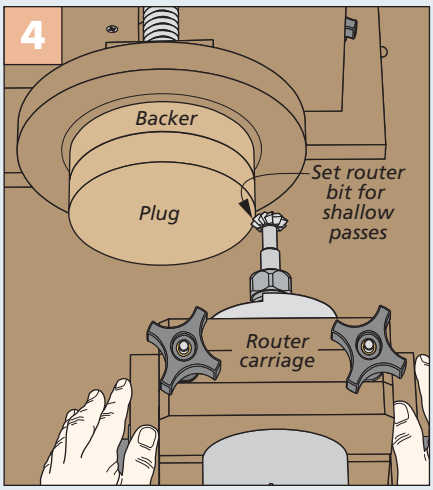

Setting Depth of Cut. Adjust the router carriage in the same manner as when threading the canister.

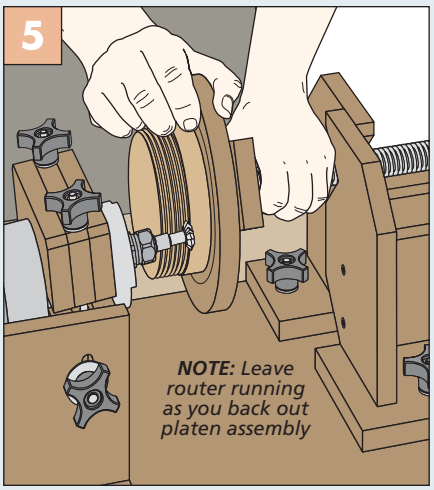

Multiple Passes. Cut threads past the plug into the backer. To avoid burning and chipout, make several passes.

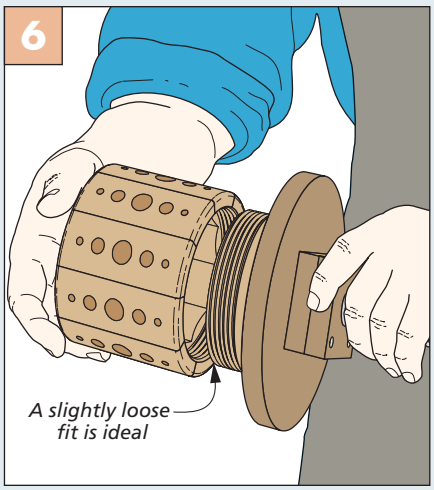

Sneak Up on Fit. Remove the platen assembly and do a test run on the fit between the plug and the canister.

Weekend Project

Threaded-Lid Canister

For a small project, these eye-catching canisters pack in a lot of woodworking skills.

While I enjoy building all kinds of projects, one that includes some kind of surprise always grabs my attention. That's the case with the canisters shown here. From the outside, they appear to be turned boxes with a drop-in lid.

There are actually two surprises here. First, the lid twists onto the canister with wood threads. This is a great opportunity to put the router threading jig shown on page 22 to use.

As for that round shape? You don't need a lathe. Instead, it's formed on the router table (more on that later).

THE SIDES

The main part of the canister is made up of ten sides and a bottom. The sides are joined with beveled edges, like the staves of a barrel. Before getting to the bevels though, you need to cut the sides to final length and a little extra wide. Then form a small rabbet along the bottom end of each side. This houses the bottom, as in detail 'b' on the next page.

BEVELED EDGES. From here, the drawings along the bottom of these pages pick up

How-To: MAKE THE CANISTER BODY

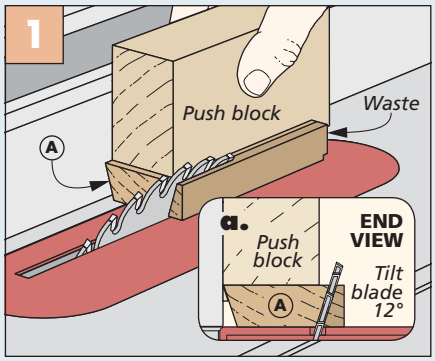

Cut Bevels. After cutting the rabbet for the bottom, rip a bevel along each edge of all the sides.

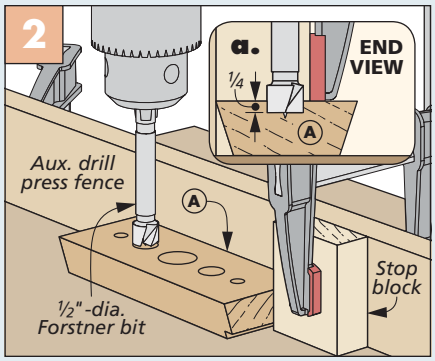

Drill Recesses. Center the workpiece under the bit and attach a stop block to drill symmetrical recesses.

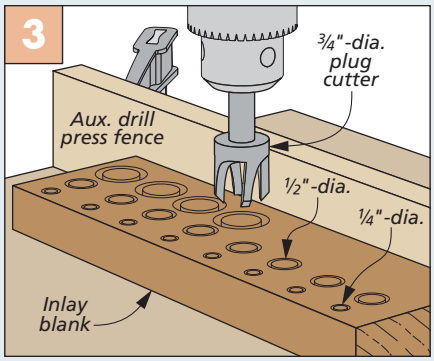

Create Plugs. Drill nearly full depth with plug cutters to form plugs that will fit snug in the recesses.

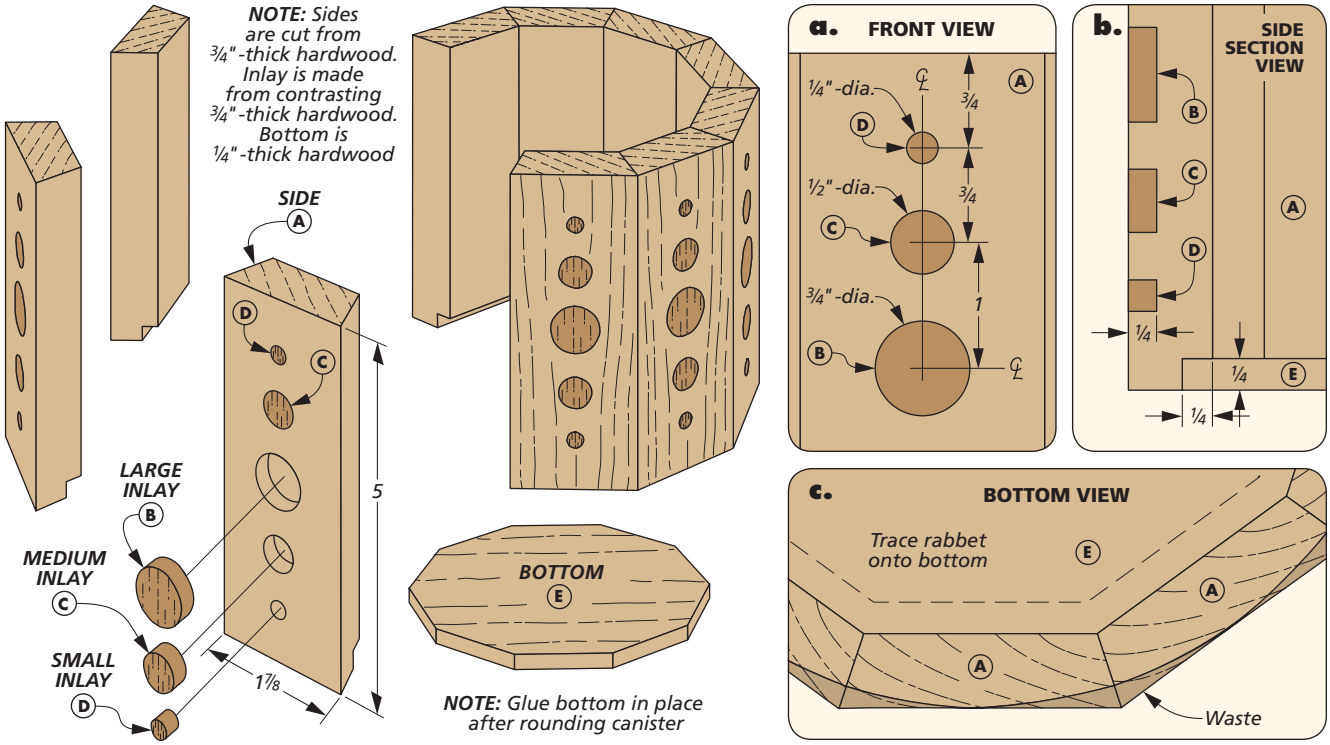

the story. At the table saw, the sides are beveled and trimmed to final width, as you can see in Figure 1.

INLAY. I opted to add a little visual flair by inlaying a series of graduated wood dots in each side. Figures 2 and 3 show the two-part process of drilling the counterbores and then creating the inlays using three plug cutters in the drill press.

After gluing the inlays in place, I trimmed them down with a handsaw. They don't need to be perfectly flush at this point. They'll get cleaned up later on.

ASSEMBLY. Gluing up a multi-sided assembly presents some challenges. The simplest solution is to use painter's tape as the clamps, as in Figure 4. Lay down a couple strips of tape (sticky side up) and arrange the sides so they're snug edge to edge. Apply some glue to the mating edges, then roll the canister up and secure the tape.

The canister is taking shape now. The next step is to take it from a ten-sided assembly to a round one. The way to do this (without a lathe) is to use a simple jig and the router table, as illustrated in Figure 5. The details for making and using the jig are on page 64.

THE BOTTOM. A solid-wood panel forms the bottom of the canister. After planing a blank to thickness, place the canister on top and trace around the inside of the rabbet. I cut the bottom to shape at the band saw (Figure 6). A little final sanding allows the bottom to fit into its opening. You can then glue the bottom in place. Take care to avoid squeezeout, which is difficult to remove inside.

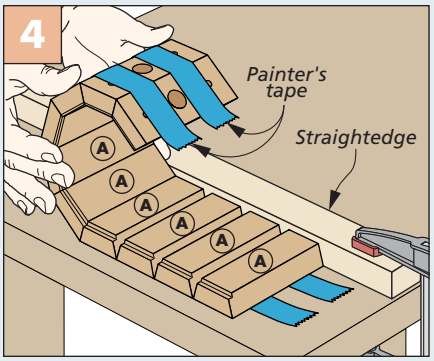

Glue Up. A straightedge clamped to the workbench keeps the sides aligned while "clamping" them with tape.

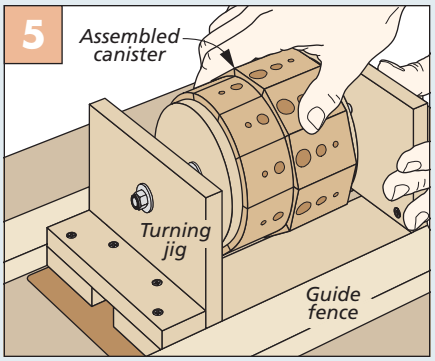

Router Turning. A simple jig (page 64) is used to turn the outside of the canister round with a router bit.

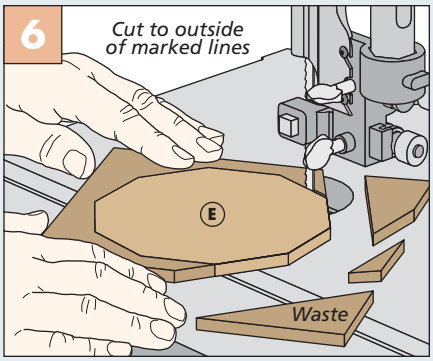

Cut the Bottom. Trace the shape of the bottom onto a blank and cut it to shape at the band saw.

Creating a THREADED CANISTER LID

With the construction of the main part of the canister under your belt, it's time to turn your focus to creating the threads and the unique lid.

INSIDE THREADS. There are two parts to making the threads: inside threads cut in the canister body and outside threads formed on the lid. I started with the inside threads and used that as a guide for fitting the outside threads later on. For the threadmaking, you'll turn to the threading jig shown on page 22. The drawing below shows how the canister is set up on the jig. The key here is to take your time. Rout the threads in several, light passes to create crisp threads that will work smoothly.

ROUNDOVERS. Once the canister comes off the threading jig, make a stop at the router table. Here, you rout a roundover on the upper and lower edges, as shown in the drawing at right.

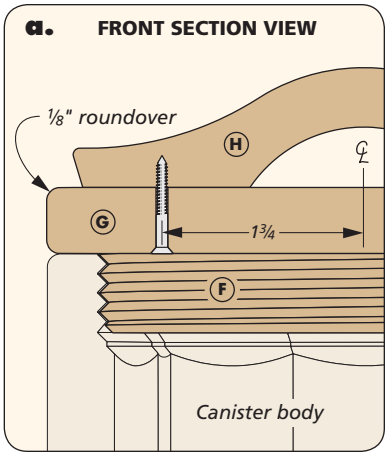

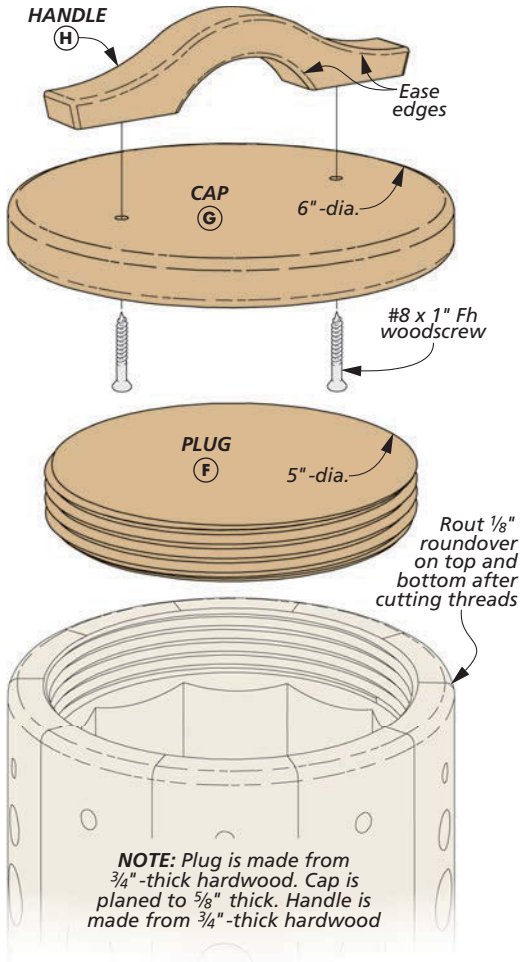

THREE-PIECE LID

The other part of the canister is the lid shown in the drawing at right. It's made up of three parts: the plug, the cap, and the contrasting handle. You'll work on each part separately and bring them together at the end.

THE PLUG. First up is the plug. This threaded piece twists into the threads in the canister body. Creating the plug begins with cutting a disc. It's sized ⅜" larger than the opening in the top of the canister. I used a simple band saw jig to create a consistent shape, as illustrated in Figure 1 on the next page.

From here you cut the threads on the plug. Once again, you make the threads using the jig. The setup is nearly the same, as you can see in Figure 2 on the next page. What's different is that the plug is attached to a sacrificial backer in order to form threads on the full length of the plug. Page 28 covers the process of creating outside threads, with tips on getting the best results. To minimize binding, aim for what seems like a slightly loose fit. The lid will still cinch down tight.

The last bit of work to do on the plug involves forming a chamfer on the lower end. This helps get the plug started in the threads of the canister and prevents the plug threads from chipping. A chamfer bit in the router table is my tool of choice.

However, the round shape of the plug means you can't use a standard fence. And the threads are an inconsistent surface for riding on the bearing of the bit. Instead, I used a V-notch fence to cradle the plug while routing, as illustrated in Figure 3 on the next page.

THE CAP. The second part of the lid assembly is the cap. And it's the simplest of the parts to make. Using the same band saw jig as before, shape a disc that matches the outside diameter of the canister. Once it's sanded smooth, rout a roundover on the upper and lower edges, as in detail 'a' above.

THE HANDLE. The handle forms the final piece of the puzzle. I made it from the

How-To: ROUT THE CANISTER THREADS

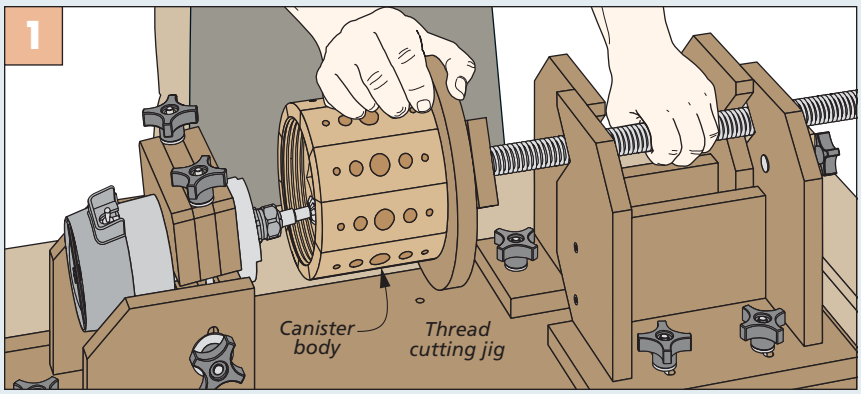

Cut Inside Threads. In order to create the inside threads, the bottom of the canister is secured to the platen on the threading jig with screws. For step-by-step instructions on using the jig, refer to page 26.

How-To: CREATE THE LID & SHAPE THE HANDLE

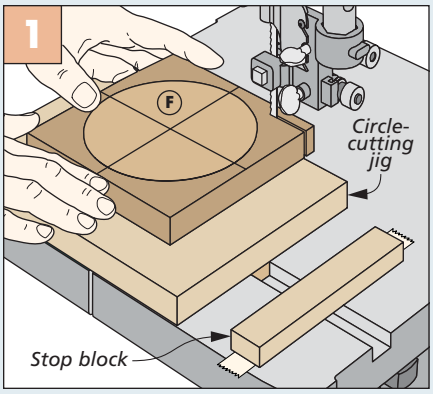

Cut the Plug. Turn to page 65 to find instructions to make and use this circle-cutting jig for your band saw.

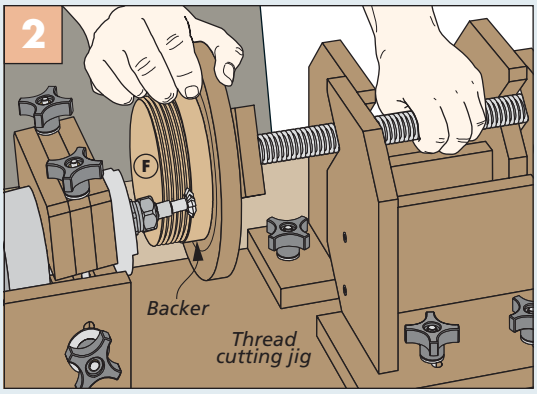

Cut External Threads. The threads on the plug are shaped using the same jig. You'll find the setup and directions on page 28.

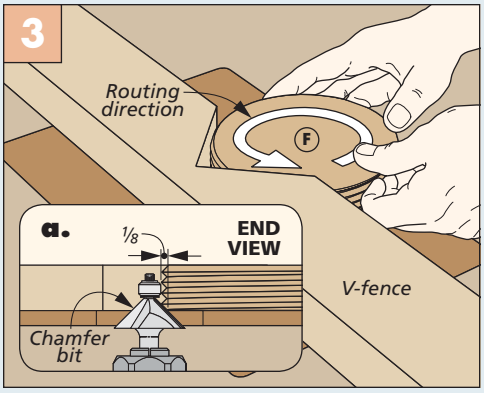

Rout a Chamfer. A V-notch fence provides two bearing points for the plug while routing a chamfer (refer to page 65).

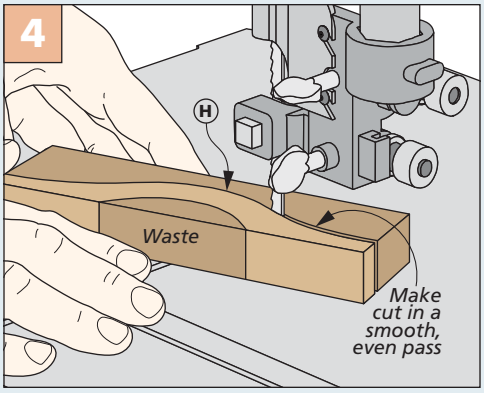

Cut the Handle. The band saw does the heavy work to shape the handle. Then finish up with some hand work at the bench.

HANDLE PATTERN (Full size - 100%)

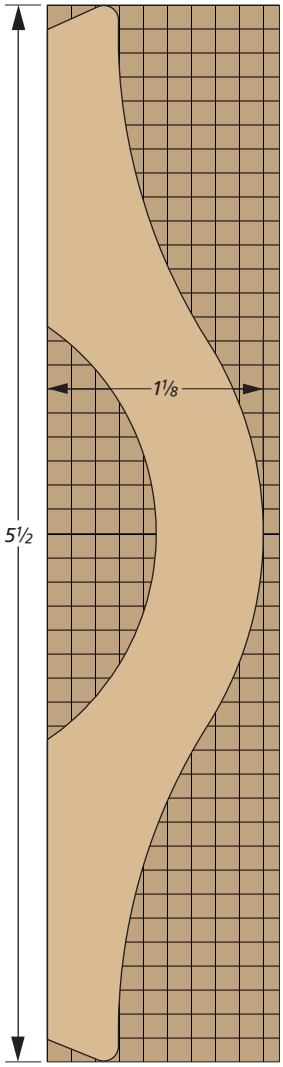

same contrasting material that the inlays are made from.

Making the handle requires a few steps, but none of them are difficult. The starting point is rough cutting the handle to shape at the band saw, as shown in Figure 4 above. Use the handle pattern in the upper right drawing as a guide for making the cuts.

A sanding drum in the drill press smooths the concave curves. I like to use files to remove the blade marks on convex curves. Finish up with some sanding to give the handle a smooth surface.

Materials, Supplies & Cutting Diagram

A	Sides (10)	¾ x 1⅞ - 5	**F**	Plug (1)	¾ x 5½-dia.
B	Large Inlays (10)	¼ x ¾-dia.	**G**	Cap (1)	⅝ x 6-dia.
C	Medium Inlays (20)	¼ x ½-dia.	**H**	Handle (1)	¾ x 1⅛ - 5½
D	Small Inlays (20)	¼ x ¼-dia.	•	(2) #8 x 1" Fh Woodscrews	
E	Bottom (1)	¼ x 5¼-dia.	•	(1) 12" x 12" Adhesive-Backed Cork	

¾"x 8" - 36" Hard Maple (2.0 Bd. Ft.)

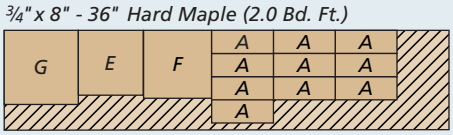

¾"x 2" - 12" Padauk (.17 Bd. Ft.)

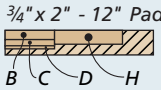

LID ASSEMBLY. At last, it's time to bring the three lid parts together. There is a definite order of operations here. Begin by attaching the handle to the cap with screws. The key is aligning the handle with the grain direction on the cap.

Joining the handle and cap to the plug is next. Keep two important points in mind as you do this. The plug should be centered on the cap. To do this, partially thread the plug into the canister. Then align the grain and glue the cap in place. The canister serves as a guide for centering these two round shapes on each other.

The other point is to go easy on the glue to avoid gluing the lid into the canister. The final touches are spraying on a finish (I used lacquer) and covering the bottom with a piece of cork. Then you just need to decide what goes inside. W

Designer Project

Adjustable Desk

Whether you prefer to stand or sit while working, this unique desk can adjust to suit your needs.

Standing desks are becoming increasingly popular these days, mainly due to overall concerns about fitness, as well as the back problems related to sitting all day. But there's something nice and familiar about a desk you can sit at from time to time, as well.

AN ADJUSTABLE DESK. This innovative, adjustable desk offers the best of both worlds. The top is formed from two glued-up, solid-wood panels that are connected to one another with aluminum arms mounted to a center pivot point. The panels can be adjusted in relation to one another much like a seesaw: When one goes up, the other goes down.

UNLIMITED POSSIBILITIES. This unique design allows you to raise the front panel to create a standing desk, or lower it to a standard desk height for sitting. And since people are all different heights, the desk position is infinitely adjustable in between the high and low settings. Gas springs beneath the desk control the pivoting action for smooth operation.

▲ To change from a standing to sitting position, simply loosen the knobs and lower the wider, front panel to the desired height.

Construction Overview / OVERALL DIMENSIONS: 46⅛"W x 42½"H (max.) x 28½"D

Narrow and wide panels glued up from thick maple

Brackets fit in shallow mortises in underside of top panels

Brackets are connected to aluminum arms with bolts and threaded inserts

A studded knob threads into a tapped hole in the aluminum disc to lock the top panels in position

Aluminum arms pivot on center discs to control up and down motion of top panels

Gas springs control up and down motion of top panels

Stretchers join the end assemblies to one another

Shop-made spring brackets formed from aluminum angle

Upper rails connect the legs and have threaded inserts to fix the aluminum arms in position

NOTE: Turn to Sources on page 67 for hardware information

Legs join to the feet with angled tenons to form a "V" shape

Thick feet form a sturdy base for the adjustable desk

Raise front panel to stand at desk

NOTE: Desk can be locked at any comfortable position, sitting or standing

41½

Lower front panel to sit at desk

30

Gas springs regulate the up and down motion of the desk, while two star knobs lock it down once in position.

Build the end **ASSEMBLIES**

Like many large projects, the assembly process for this unique desk starts at the bottom, with the base. But unlike other projects, you won't find a lot of perpendicular lines in the two end assemblies that make up the base. As you can see at right, each one consists of a thick, curved foot, two angled legs that extend upward in a V-shape, and an upper rail that joins the angled legs.

CURVED FEET. You can start work on the feet, which are thick maple blanks glued together from two thinner boards. After glueup, you can cut the blanks for the feet to the overall dimensions shown in detail 'c' at right.

MORTISES. Detail 'c' also shows the three mortises on each foot: Two on the top edge for the legs, and one on the inside face for a stretcher. It's easier to form these mortises while the foot blank is still square (Figure 1 below).

ARCS. With the mortises complete, shaping the arcs at the top and bottom is the next order of business. Figure 2 shows the simple process for laying out and marking these. Then it's just a matter of cutting the arcs and sanding them

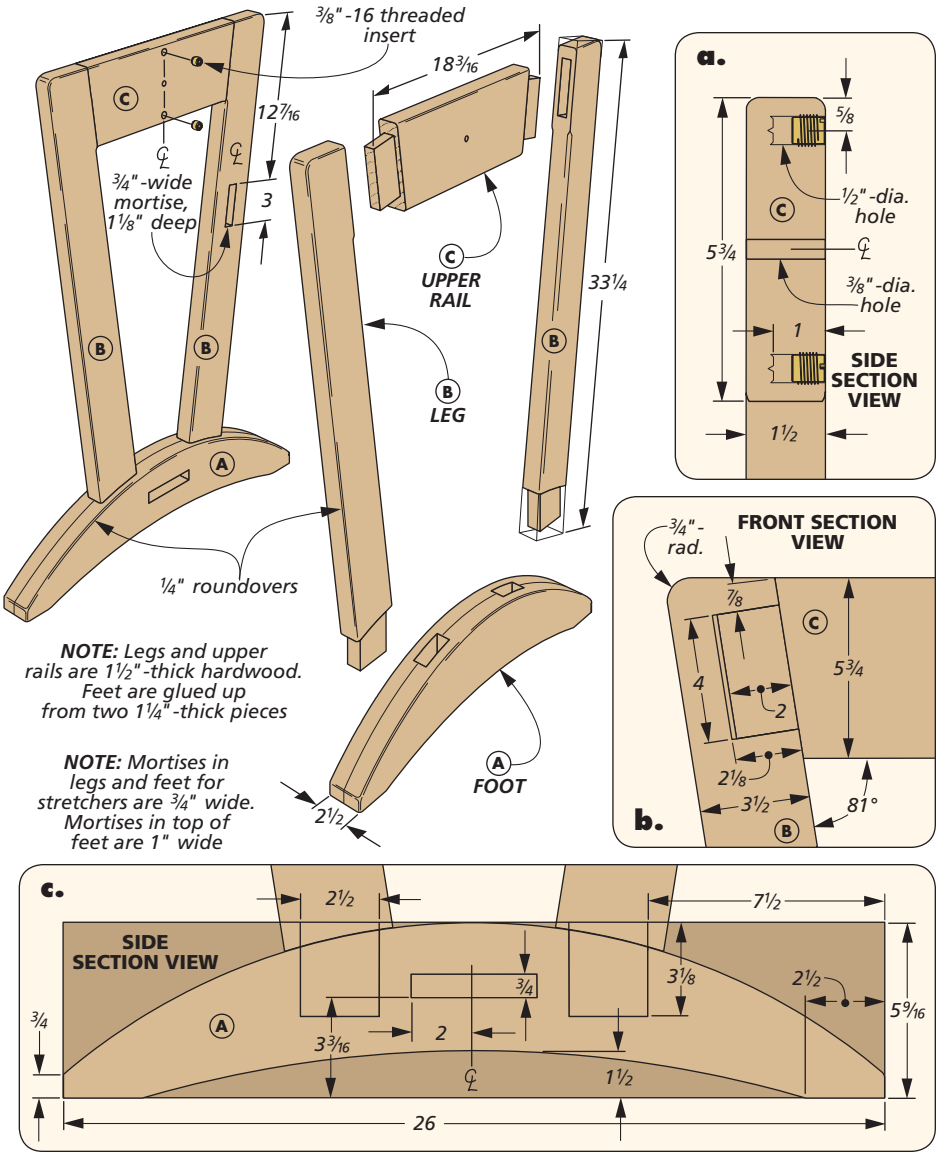

How-To: FORM THE FEET

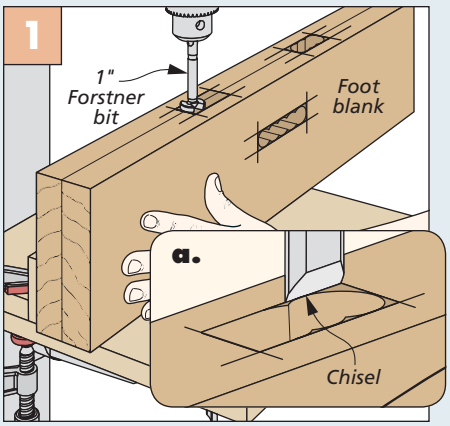

Mortises. While the blanks for the feet are still square, drill out the waste for the mortises. Then chisel out the waste.

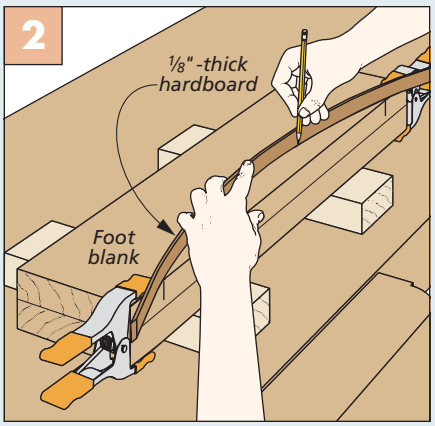

Lay Out Arcs. Bend a flexible strip of hardboard to form the shape of the arc before marking it.

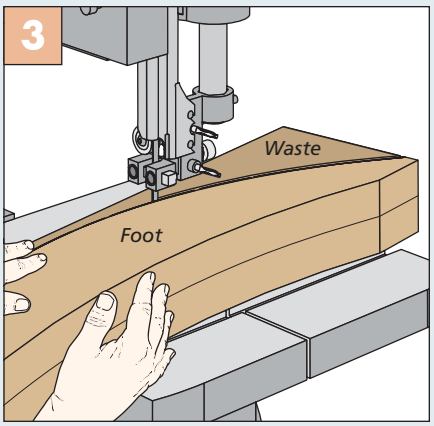

Cut the Arcs. The band saw makes quick work of the arcs. Stay outside the layout lines, then sand them smooth.

smooth, as shown in Figure 3 on the previous page. I completed the feet by routing roundovers along all edges, except for the bottom foot pads.

ANGLED LEGS. As mentioned earlier, the legs extend upward from the feet in a "V" to give the desk some visual interest. As you can imagine, however, creating these legs, not to mention the angled tenons that mate with the feet, involves a few challenges.

CUT & MITER. For starters, you can cut all four legs to the overall size shown in the main drawing on the previous page. Then miter the legs at the top and bottom ends to establish the angle of the legs. This cut simply requires rotating the miter gauge 9°, trimming one end, and then flipping the leg end for end to trim the opposite end. Now you're ready to cut the radius shown on the outside top corner of each leg at the band saw, as shown in detail 'b' on the previous page.

ANGLED TENONS. The trickiest part of making the legs is forming the angled tenons on the bottom. Figures 1 through 3 at right will walk you through the process. As you can see, cutting the cheeks is easily accomplished at the table saw (Figure 1), but it takes some band saw work to complete the tenons. Check the fit in the mortises in the feet as you go. Once you have a good fit, you can match the tenon shoulders to the curved profile of the feet, as shown in Figure 4.

MORTISES. Each leg has a mortise to accept an upper rail on its inside edge. And the back legs have a mortise on their inside faces to accept a stretcher. These mortises are all square with the edges of the legs, so you can cut them in your usual fashion.

UPPER RAILS. You want to make sure that the upper rails fit seamlessly between the legs. So cut them long and mark the tenon shoulders as shown in Figure 5. Then it's just a matter of drilling the three holes shown in detail 'a' on the previous page, and forming the angled tenons as before.

ROUNDOVER & ASSEMBLE. Now you can glue and assemble the upper rail and legs. After routing a roundover on this assembly as shown in Figure 6, glue the legs into the feet.

How-To: CREATE ANGLED JOINERY

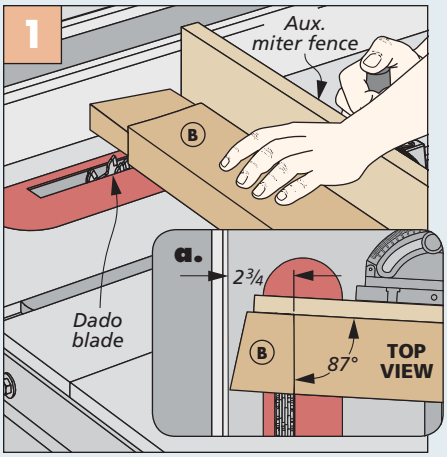

Tenon Cheeks. Use a dado blade to establish the angled tenon shoulders and then remove the cheek waste.

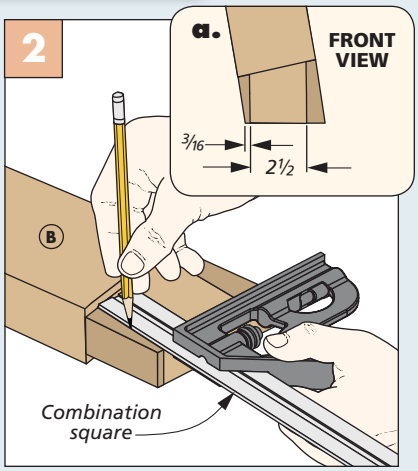

Tenon Layout. Set a combination square to lay out and mark the angled tenon shoulders.

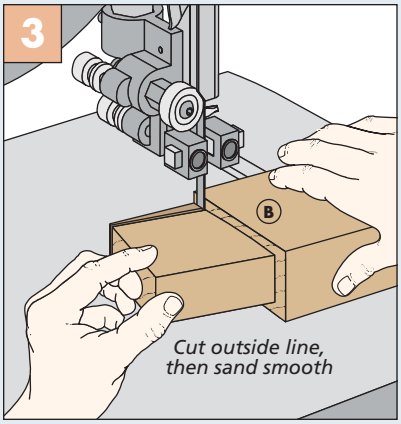

Complete Tenons. Some careful band saw work is the key to completing the angled tenon cuts.

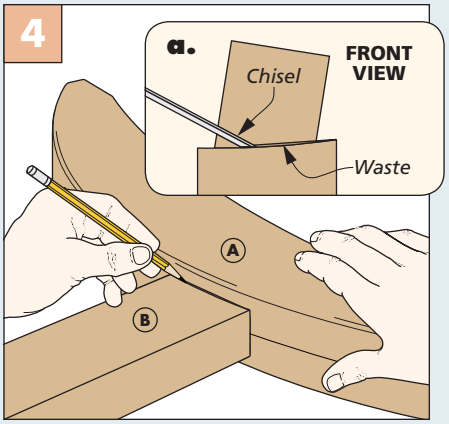

Match Feet. Mark the shoulders to match the curved feet, then chisel and sand the shoulders for a seamless fit.

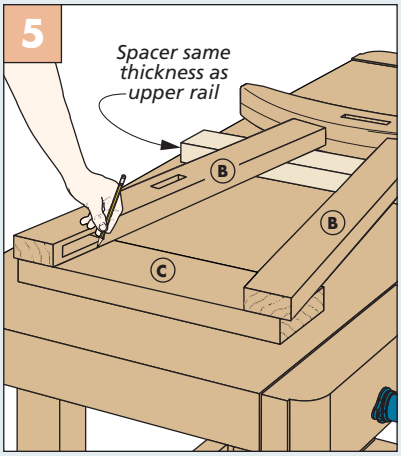

Upper Rail Layout. Insert the legs in the feet, position the upper rail, and mark the tenon shoulder locations.

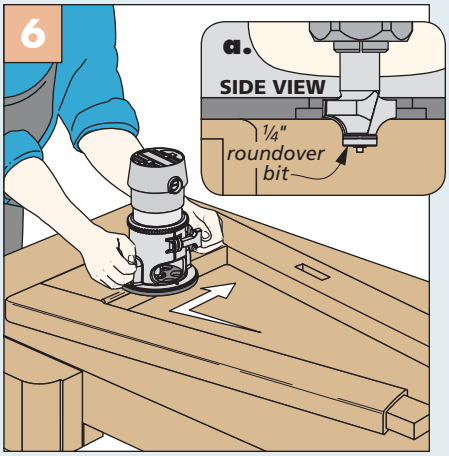

Roundovers. After joining the upper rails and legs, rout a roundover along the inside and outside edges.

Add stretchers & TOP ASSEMBLY

With the two end assemblies complete, the next steps are fairly straightforward. They involve making a couple of long stretchers to connect those end assemblies to one another and building the top.

TENONS. The stretchers connect to the end assemblies with tenons on the ends that fit into mortises. The tenons on the lower stretcher fit mortises in the feet, while the tenons on the upper stretcher fit mortises in the back legs. I cut the tenons using a table saw with a dado blade, as explained in Figure 1 below.

SHAPE THE LOWER STRETCHER. Before the final assembly of the desk base, there's one more detail to add to the lower stretcher, and that's a gentle radius along the top face. This creates a comfortable resting place for your feet when using the desk in its sitting position.

To start this radius, I tilted the table saw blade slightly and passed the piece through on each edge (Figure 2). The rest of the work involves shaping the stretcher with a block plane and sandpaper until you obtain a pleasing rounded shape.

BASE ASSEMBLY. That about wraps up the work on the base of the desk. You can spread glue in the mortises in the end assemblies and on the tenons on the stretchers, and use long clamps to draw the assembly together.

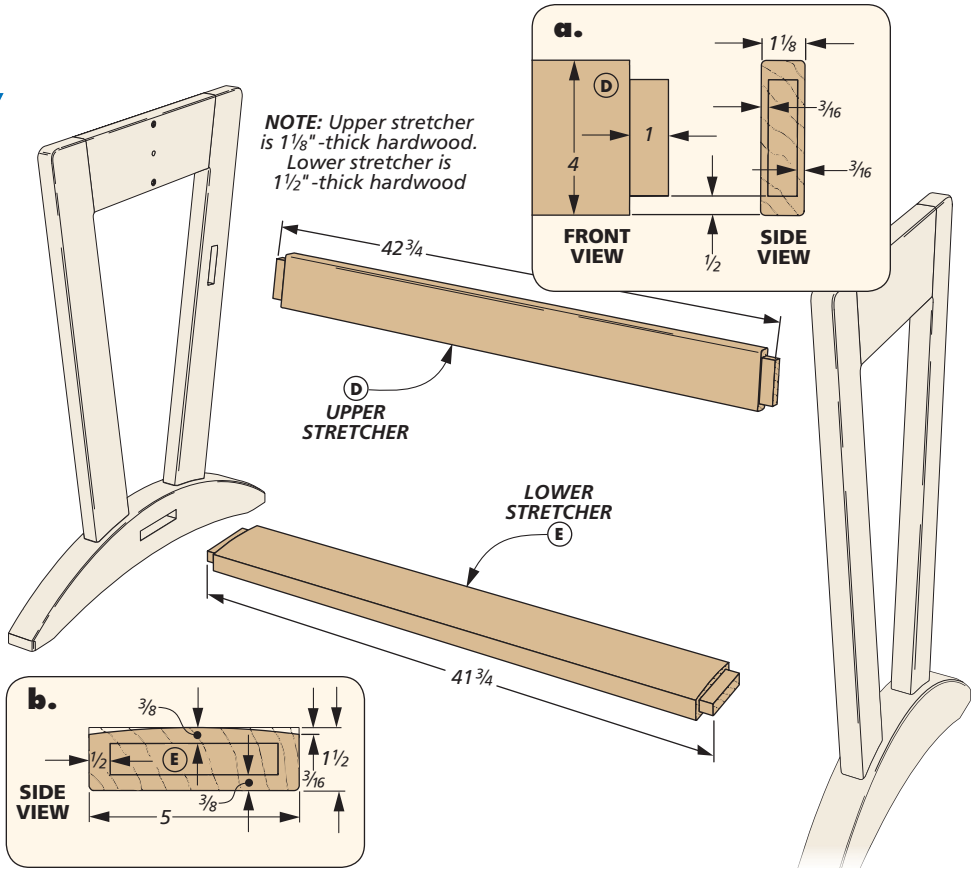

ADDING THE TOP

The top is the portion of the desk that adjusts and allows you to use it while standing or sitting. It consists of two glued-up panels with hardwood brackets installed beneath. Later on, these brackets will connect to the adjustment mechanism of the desk that enables the panels to pivot in relation to one another (more on this on page 40).

MAKING TOP PANELS. You'll want to glue up several boards to form the wide and narrow top panels, so take some time to find a good grain match from board to board. Once the glue dries, you can sand the panels flat and smooth.

MORTISES. Each panel has a couple of mortises on the bottom face to accept a tongue on the brackets. The panels are too large to set up on the drill press for cutting these mortises, so I used a plunge router guided by a straightedge, as shown in Figure 1 on the following page. You'll want to lay out the mortise locations carefully, as it's important that the outside faces of the brackets are flush with the ends of the top panels. After that, you can just clamp the straightedge in position. Then rout from one end point to the other before chiseling the ends of the mortises square.

BRACKETS. With the top panels complete, the brackets are the next order

How-To: SHAPE THE STRETCHERS

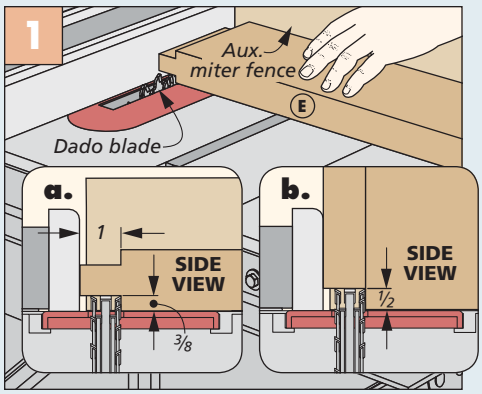

Tenons. Use a dado blade in the table saw to form the tenons on the ends of the upper and lower stretchers.

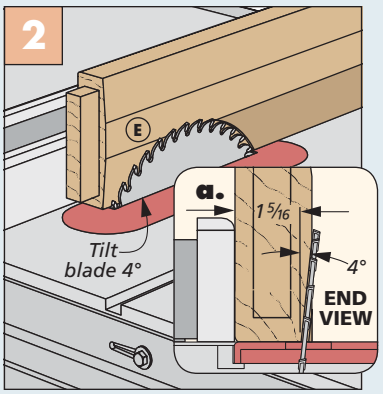

Bevels. To begin shaping the lower stretcher, bevel the top face with a pair of edge cuts.

of business. After cutting a rectangular blank to size, the first thing I did was rabbet the top ends to fit the mortises in the panels, as shown in Figure 2 below. Check the fit as you go.

Before shaping the brackets, I also drilled holes in the outside faces, while the edge was still square. The position of these holes is particularly critical to the function of the desk, so use a drill press fence and a stop block for each series of holes (details 'a' and 'b').

Now you're ready to shape the brackets. But here again, consistency from bracket to bracket is important. So I started by making a hardboard template to match the shape shown in detail 'a' at right. After cutting the brackets slightly oversize, as in Figure 3 below, I trimmed each one flush to match the template.

COMPLETING THE TOP. With the brackets shaped, it's time to install the threaded inserts in the holes. Now glue and clamp the brackets into the mortises in the top panels, with the threaded inserts facing out.

The last bit of work involves rounding the edges of the top panels and brackets. This is accomplished with a hand-held router. You'll have to position the panels on end to form the roundover around the ends and brackets (more on this on page 66). I also sanded the inside faces of the brackets to remove the sharp edges.

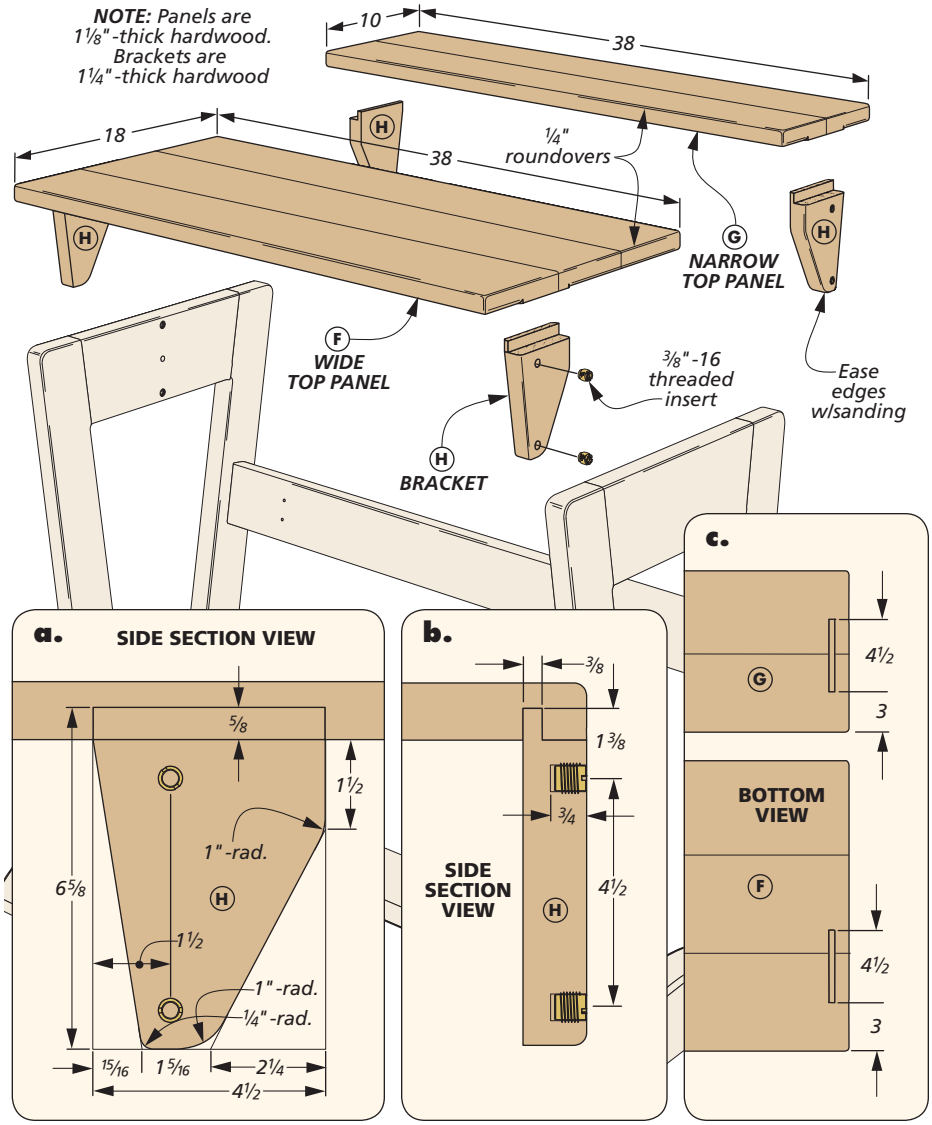

How-To: FORM TOP MORTISES & BRACKETS

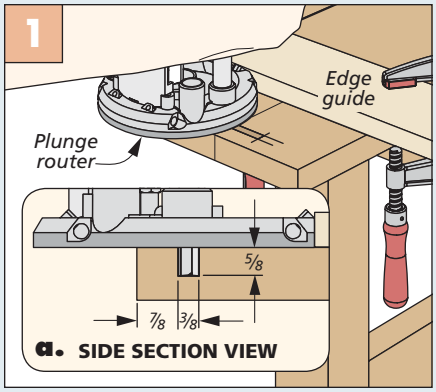

Mortises. Use a plunge router guided by a straightedge to cut the mortises in the bottom faces of the top panels.

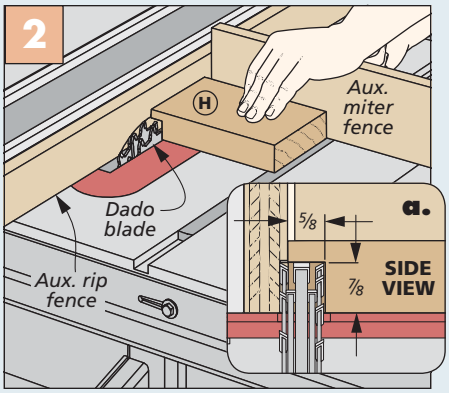

Rabbets. With a dado blade in the table saw, rabbet the top ends of the brackets to fit the mortises in the tops.

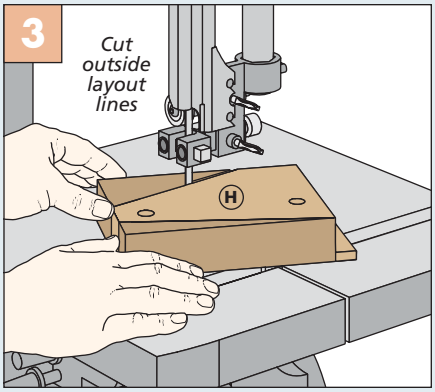

Cut to Shape. Rough cut the brackets at the band saw before trimming them flush using a template as a guide.

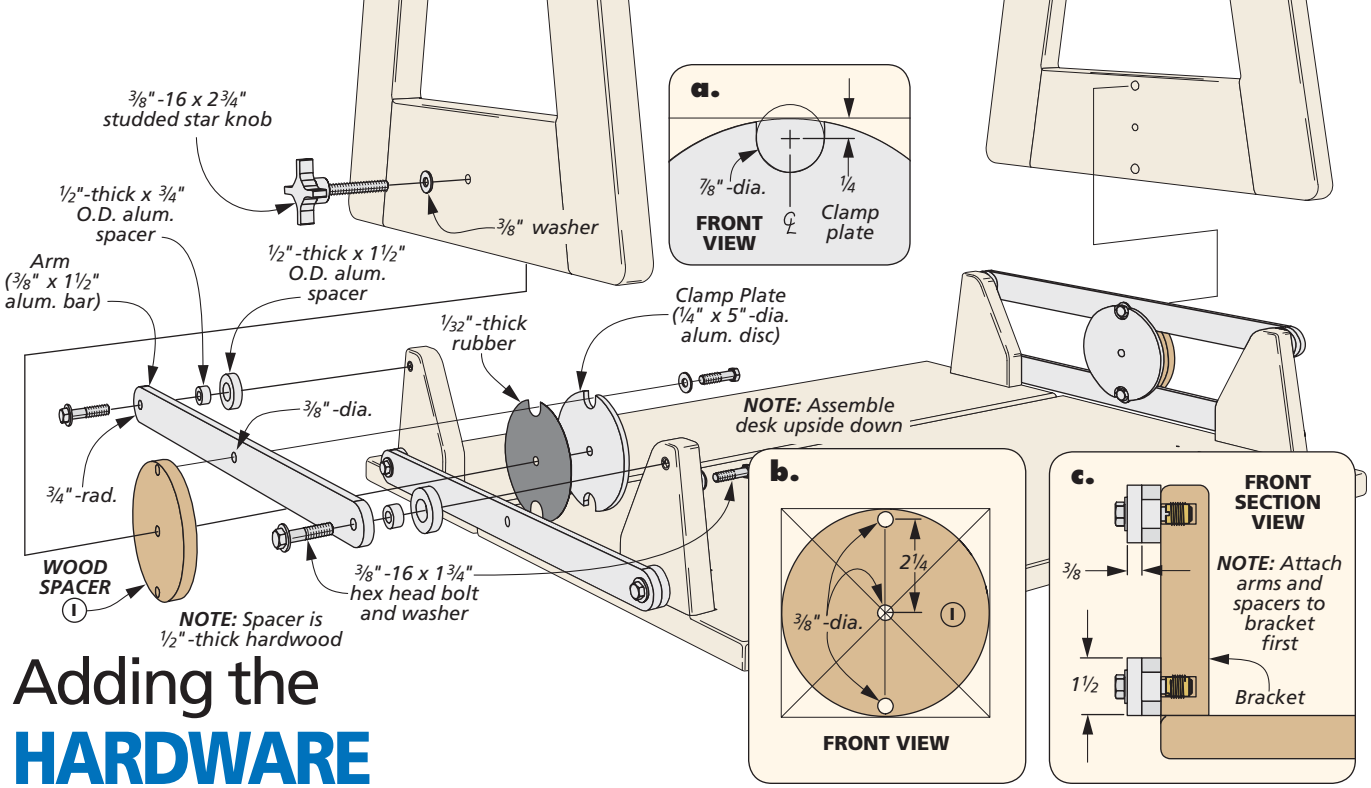

Adding the HARDWARE

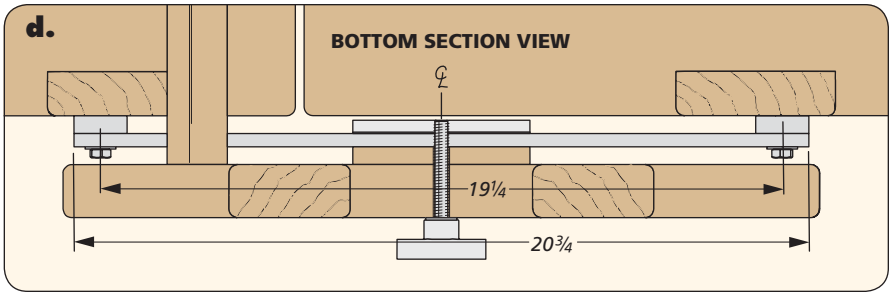

We have now officially advanced to the "mechanical" portion of the desk. Despite all the parts shown above, it's not that complicated to put together. The key is careful layout of your holes and cuts and just taking it a step at a time.

WOOD SPACERS. The only wood parts left to complete are the circular spacers. These create a gap between the aluminum arms and the upper rails for smooth operation of the desk. They're the same diameter as the disc-shaped aluminum clamp plates, so after purchasing those, you can trim the wood spacers flush to match (Figure 1). Then drill the holes in the wood spacers shown in detail 'b.'

ALUMINUM CLAMP PLATES. The aluminum clamp plates are already the proper diameter, so there's not much machining to do. To determine the notch and center hole locations, you can use the wood spacer you just made. Then complete the clamp plate following the drawings and instructions in Figures 2 and 3 below.

How-To: SHAPE THE WORKING PARTS

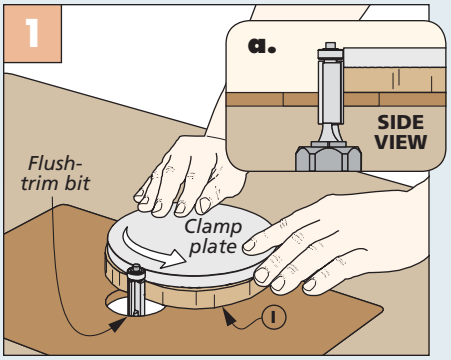

Flush-Trim. The wood spacers are the same diameter as the purchased aluminum discs so use the discs as a routing template.

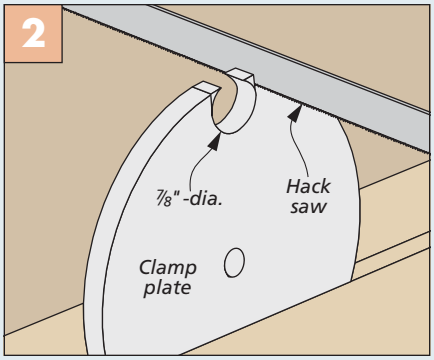

Notches. After drilling holes, complete the notches on the aluminum spacers with a hack saw and some sanding.

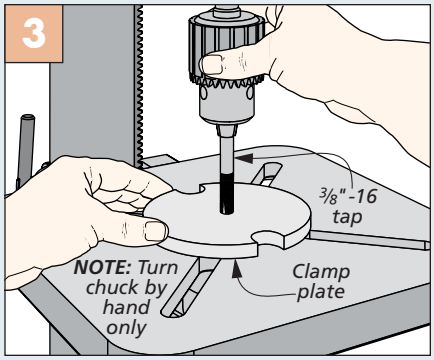

Tapping Holes. To ensure straight threads, start tapping them at the drill press before completing them by hand.

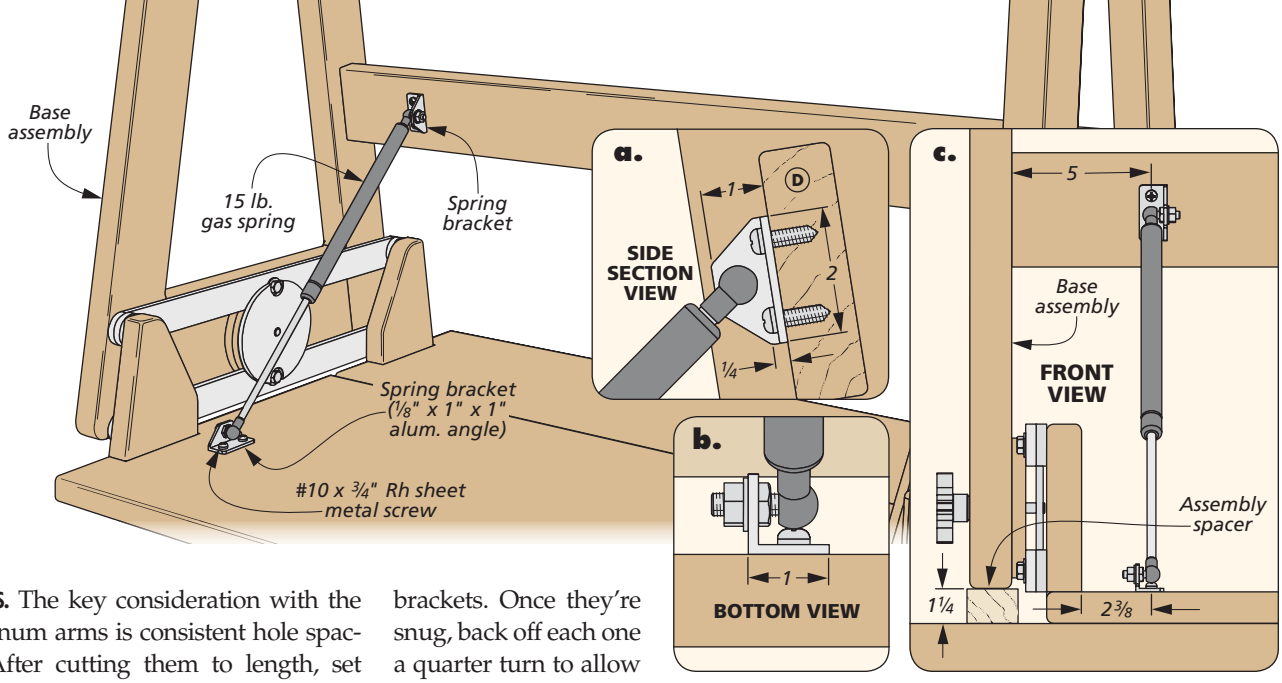

ARMS. The key consideration with the aluminum arms is consistent hole spacing. After cutting them to length, set stops on the drill press for drilling each series of holes (detail 'd,' previous page). Then round the ends witha file.

ASSEMBLY. It's easiest to assemble the desk upside down. Set the two panels side by side, with the brackets oriented as shown (main drawing, opposite page). After applying threadlocking compound to the inserts, slip the bolts through the aluminum arms and spacers, and into the threaded inserts in the brackets. Once they're snug, back off each one a quarter turn to allow for movement. Next, insert bolts through the center holes in the arms, and slip the wood spacers over the bolts from the other side.

Now bring in the base assembly, upside down and elevated with spacers (detail 'c'). Apply a piece of non-skid rubber to the clamp plate, and then position the plate on the arms. Finally, thread the knob through the outside face of the upper rail and into the clamp plate on either side.

GAS SPRINGS. All that's left is adding the gas springs and shop-made mounting brackets to control the motion of the desktop. The details and dimensions are provided in the drawings above.

SITTING OR STANDING. After a few coats of finish, your adjustable desk is complete. Whether you like to sit or stand, it's easy to adjust this desk to match your preferred method of work. W

Materials, Supplies & Cutting Diagram

A	Feet (2)	2½ x 5⁹⁄₁₆ - 26
B	Legs (4)	1½ x 3½ - 33¼
C	Upper Rails (2)	1½ x 5¾ - 18³⁄₁₆
D	Upper Stretcher (1)	1⅛ x 4 - 42¾
E	Lower Stretcher (1)	1½ x 5 - 41¾
F	Wide Top Panel (1)	1⅛ x 18 - 38
G	Narrow Top Panel (1)	1⅛ x 10 - 38
H	Brackets (4)	1¼ x 4½ - 6⅝
I	Wood Spacers (2)	½ x 5-dia.

- (4) ⅜" x 1½" - 24" Aluminum Bars
- (2) ¼" x 5"-dia. Aluminum Discs
- (1) ¹⁄₃₂" x 12" x 12" Rubber Sheet
- (12) ⅜"-16 Threaded Inserts
- (12) ⅜"-16 x 1¾" Hex Head Bolts
- (2) ⅜"-16 x 2¾" Studded Star Knobs
- (14) ⅜" Washers
- (8) ½"-thick x ¾" O.D. Alum. Spacers
- (8) ½"-thick x 1½" O.D. Alum. Spacers
- (2) 15 lbs. Gas Springs
- (1) ⅛" x 1" x 1" - 12" Aluminum Angle
- (8) #10 x ¾" Rh Sheet Metal Screws

1½" x 5" - 84" Hard Maple (5.8 Bd. Ft.)

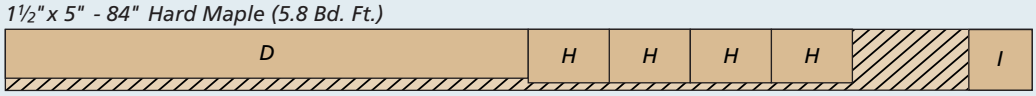

1½" x 7" - 84" Hard Maple (8.2 Bd. Ft.)

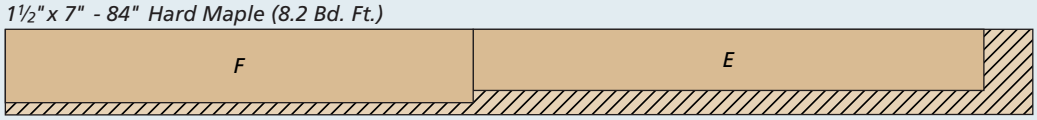

1½" x 7" - 96" Hard Maple (Two boards @ 9.3 Bd. Ft. each)

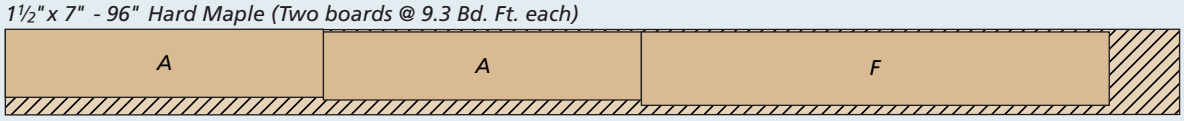

1½" x 7½" - 96" Hard Maple (Two boards @ 10.0 Bd. Ft. each)

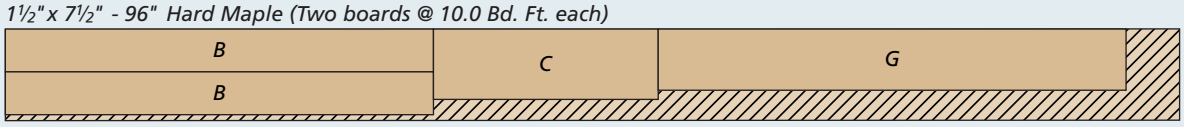

***NOTE:** All parts planed or resawn to final thicknesses shown above*

Heirloom Project

top-notch Tool Cabinet

You'll find a home for almost every tool in your shop with this classic cabinet.

Taking pride in our tools is a common hallmark shared by many woodworkers. So it only makes sense that we also want to house our tools in a storage cabinet that makes us equally proud. This eye-catching oak cabinet fits the bill nicely. In addition to keeping your most-used tools organized and within easy reach, it'll make your time spent in the shop more enjoyable, as well.

STORAGE APLENTY. Starting with the upper cabinet, the interior has three adjustable shelves that provide plenty of room for larger power tools and supplies. The extra-deep doors create a space for tools on some custom-made holders (inset photo, next page).

Down below, you'll find six spacious drawers and a pull-out tray that makes for a perfect place to set tools while working on a project. The sturdy base raises everything to a comfortable height for easy access. Best of all, this cabinet utilizes some pretty basic case construction, which means it'll come together quicker than you'd think.

Construction Overview / OVERALL DIMENSIONS: 36"W x 80"H x 23"D

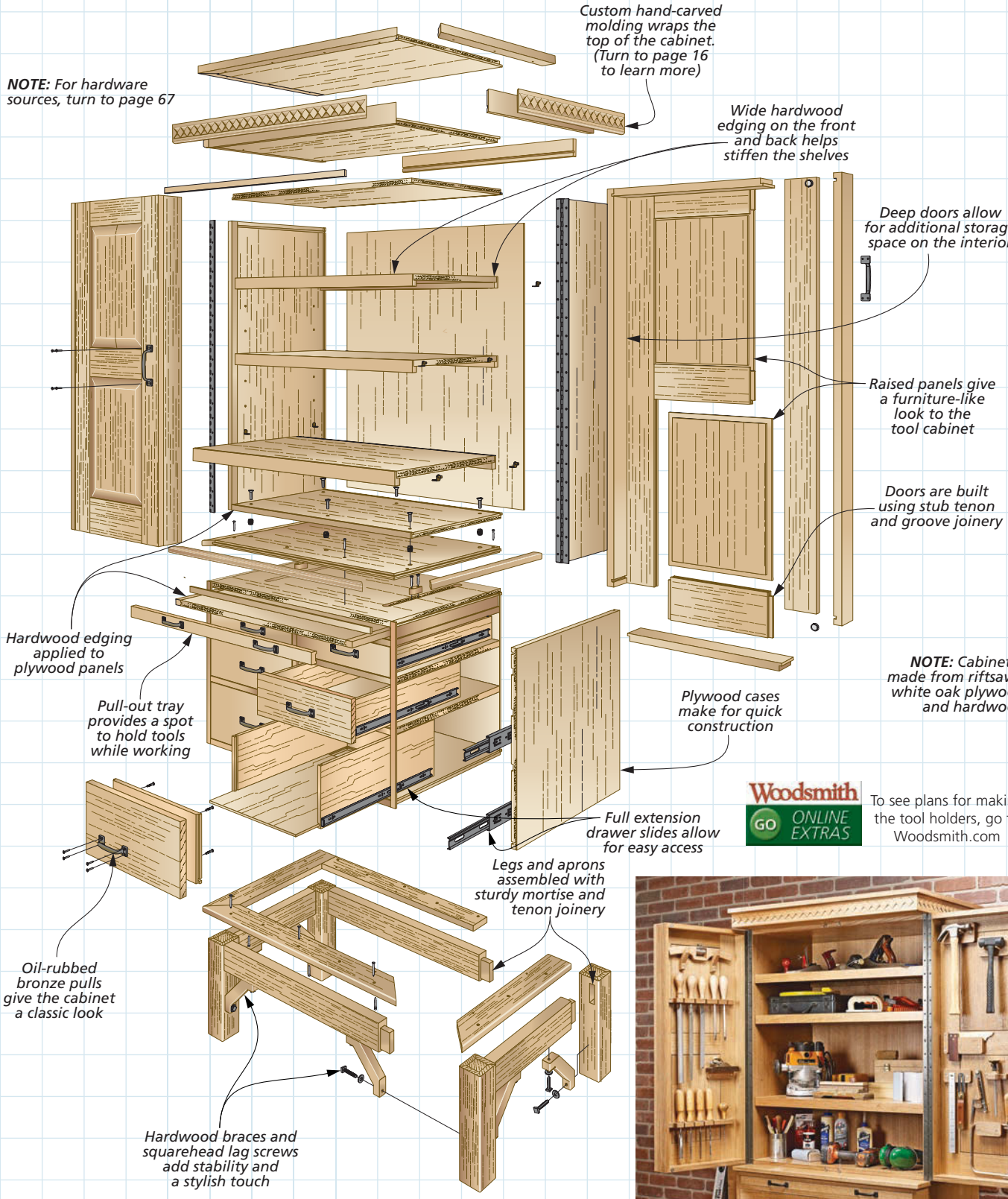

Woodsmith GO ONLINE EXTRAS

To see plans for making the tool holders, go to Woodsmith.com

▲ The deep doors provide plenty of space for additional storage. These tool holders can be customized to fit your tools.

Woodsmith GO ONLINE EXTRAS

For a full-size template for the knee brace, go to *Woodsmith.com*

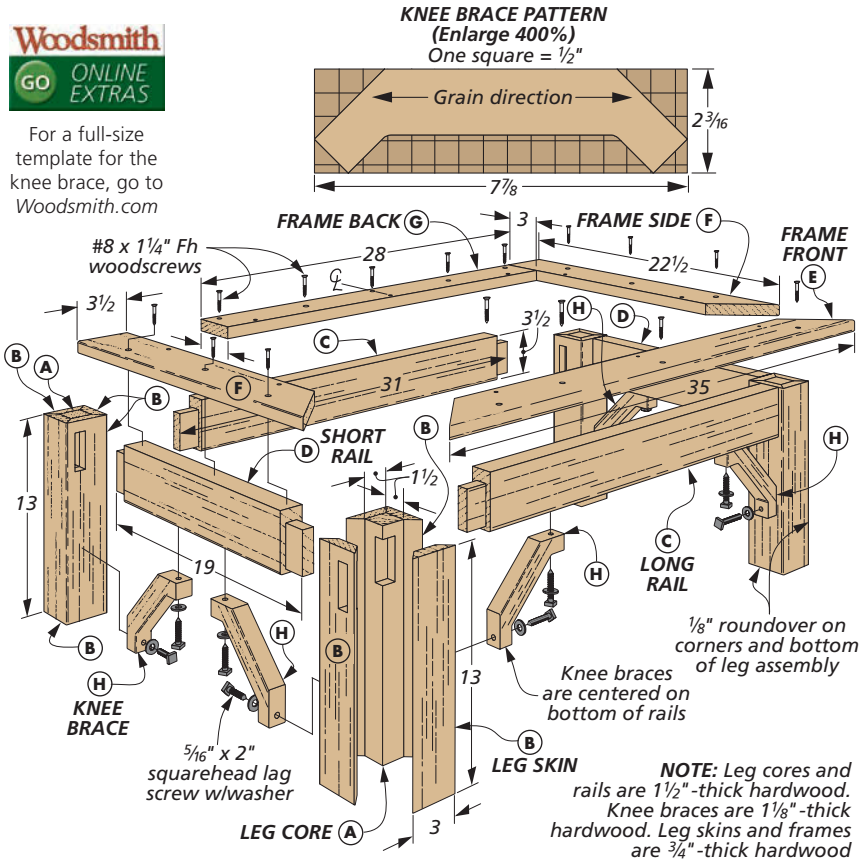

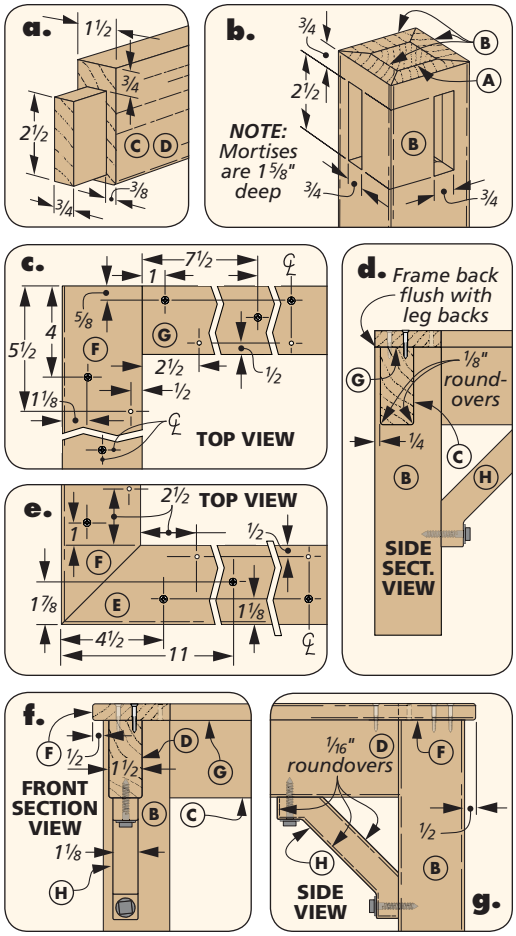

A sturdy CABINET BASE

When designing this cabinet, I had in mind that I'd be storing most of my portable power tools in it, along with all of my hand tools. All of this weight calls for the heavy-duty base you see above. It consists of four beefy legs that are connected to thick rails using mortise and tenon joinery. And for even more strength, I added six knee braces between the rails and legs. But first, I began by making the legs.

SEAMLESS LEGS. You could face glue some thinner boards to make the legs. But to match the straight-grained look of the cabinet, I wanted to avoid having noticeable joint lines that would distract from the overall appearance of the cabinet. To that end, I decided to start with a center "core" for each leg, and then wrapped that core with mitered stock (detail 'b'). The process is pretty straightforward. After cutting the center sections to size, miter the outer "skins" as shown in Figure

How-To: MAKE THE LEGS

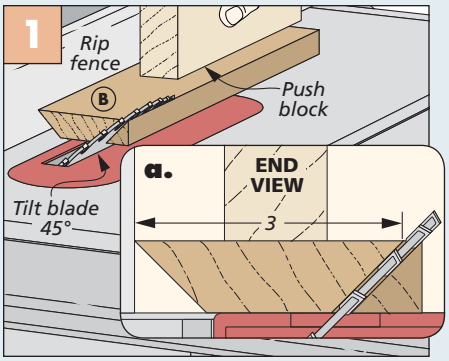

Bevel Leg Skins. With the table saw blade tilted, use the rip fence as a guide to bevel both edges of the leg skins.

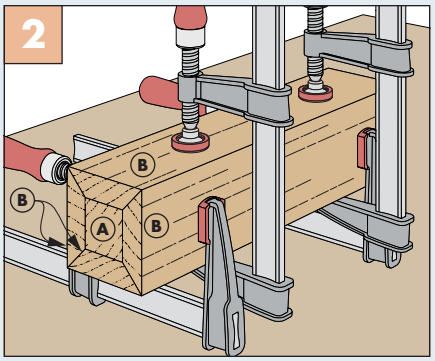

Glue Up Legs. After ensuring tight joints at the corners, use plenty of clamps to secure the skins to the core.

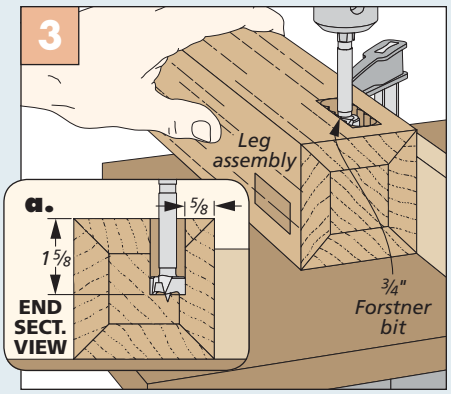

Mortises. Remove the bulk of the waste for the mortises at the drill press. Use a chisel to square up each mortise.

1 at the bottom of the previous page. Just take your time when cutting these miters so that the joints close up tightly when clamped around the center sections (Figure 2).

WIDE MORTISES. Each leg has two mortises to accept the tenons on the ends of the rails. I used a two-step process to complete these. First, remove most of the waste at the drill press, as shown in Figure 3 (previous page). The mortise walls can then be squared up with a little chisel work.

Before moving on to the rails, ease the edges on all four legs (including the bottom edges). Rounding over the mitered corners will make the joint lines disappear almost entirely.

THICK RAILS. As I said earlier, the rails are quite a bit more substantial than what's found on the typical piece of furniture. I cut all four to size from 1½"-thick stock. Now, creating the tenons on the ends of the rails just requires a trip to the table saw.

As Figure 1 at right shows, the cheek cuts can be made on all four rails with the same dado blade height. However, the tenons are offset in width. This requires two different blade positions to make these cuts (Figure 2). After easing the bottom edges of the rails (details 'd' and 'g' on the previous page), the legs and rails can be assembled.

OVERHANGING FRAME. The four pieces that make up the base frame can be cut to size next. The front corners are mitered while the back piece is a simple butt joint against the sides. These pieces are glued and screwed to the rails from the top. But before attaching them, be sure to ease the outside edges, as well as drill the countersunk mounting holes from the underside for connecting to the lower cabinet later on.

KNEE BRACES. The knee braces are the last pieces to complete the base. Figures 3 through 6 show the process I used to make these parts.

Because of their unique shape, I found it best to start with a square blank. The pattern at the top of the previous page can be enlarged and used to create a hardboard template. Then lay out the shape of the brace on each blank using the template. With that done, clip the corners of each blank (Figure 3) before roughing out the inside shape of the brace (Figure 4). Be sure to stay to the waste side of the cut line.

One at a time, attach the template to each brace using double-sided tape and trim the inside profile flush at the router table, as shown in Figure 5.

Use the setup in Figure 6 to drill the mounting holes in the braces. After that, mark the hole locations in the legs and rails and install the braces with lag screws.

How-To: MAKE THE RAILS & KNEE BRACES

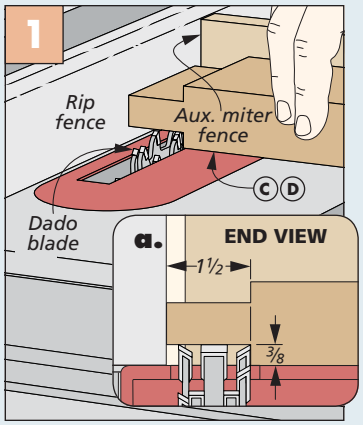

Cut Tenon Cheeks. Use a wide dado blade to form the cheeks of the tenons on the rail ends.

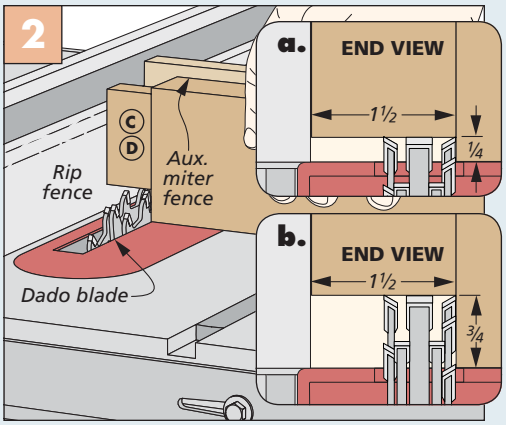

Cut Shoulders. When making the shoulder cuts, be sure to note that the tenons are offset across the width of the workpiece.

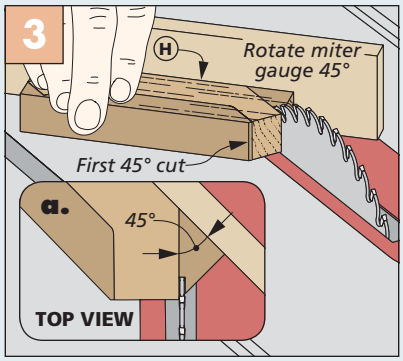

Miter Braces. At the table saw, turn the miter gauge 45° and clip the ends of the knee brace blanks.

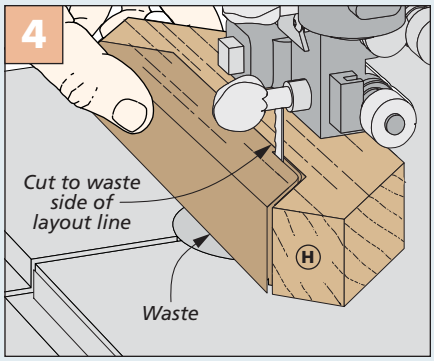

Clean Up Waste. The band saw is the perfect place to remove the bulk of the waste from the knee braces.

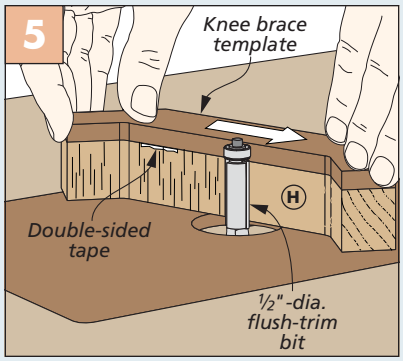

Flush Trim. Use double-sided tape to hold the template in place while trimming each knee brace flush.

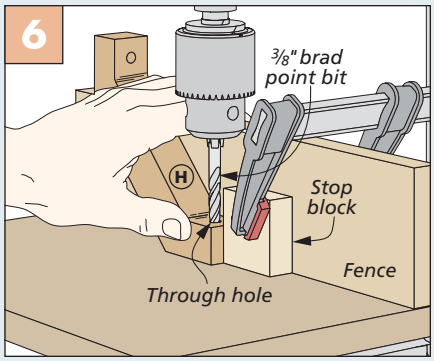

Drill Holes in Braces. Use a stop block and fence to support the braces while drilling the mounting holes.

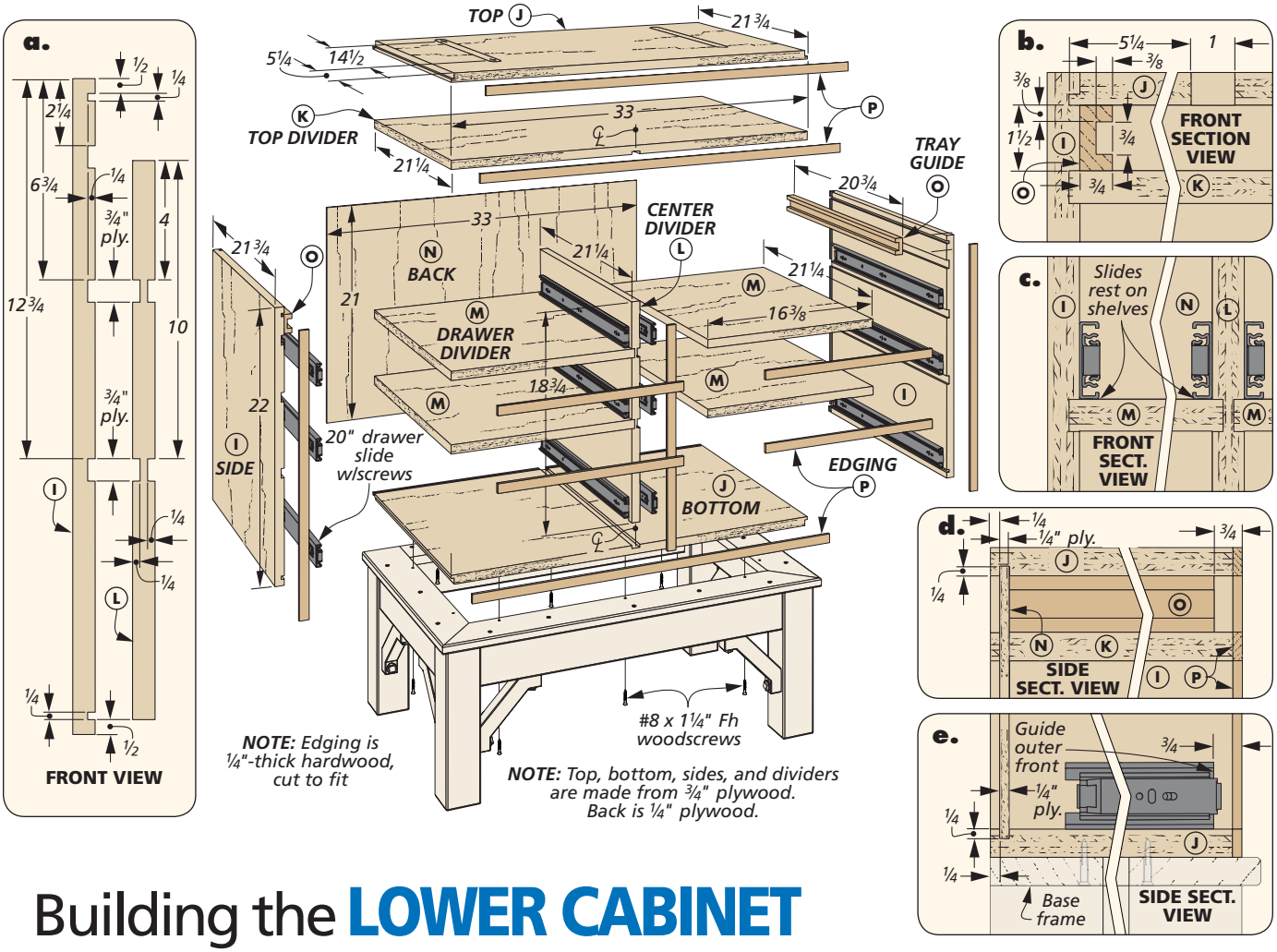

Building the **LOWER CABINET**

With the base unit complete, it's time to build the first storage section — the lower cabinet. This cabinet has six drawers that ride on metal slides. Plus, a narrow opening at the top of the cabinet provides a space for a pull-out tray.

PLYWOOD CONSTRUCTION. The entire lower cabinet consists of plywood panels that fit together with a series of grooves, dadoes, and rabbets. With that in mind, I began by cutting most of the parts that make up the case to size. I held off cutting the drawer dividers and the back to size for now. It's best to determine their sizes after dry-fitting the case parts later on.

The How-To box below (along with detail 'a,' above) provides all the details

How-To: CUT THE CABINET DADOES

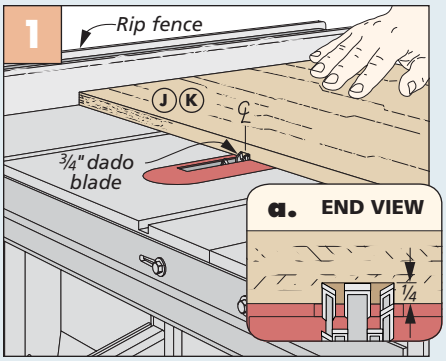

Dado Bottom & Top Divider. Set the rip fence to guide the workpiece when cutting the centered dadoes.

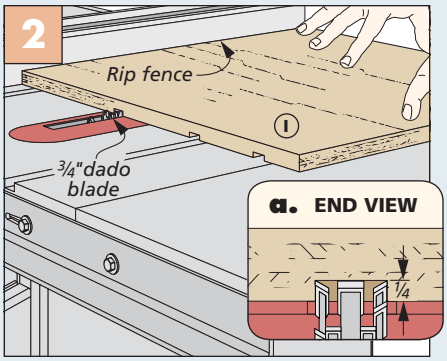

Side Dadoes. Using the same dado blade setup, reposition the rip fence to cut the dadoes in the sides.

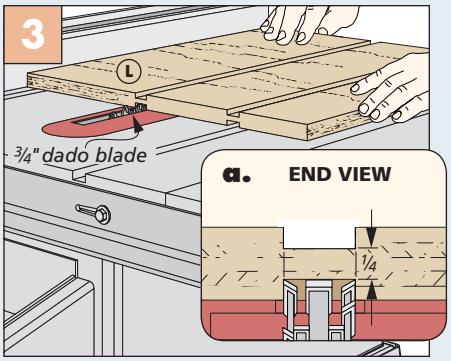

Center Divider. The procedure is the same for the center divider, but here you'll cut dadoes on both sides.

for making the ¾"-wide dadoes in the top divider, bottom, sides, and the center divider. Keep in mind that plywood thicknesses can vary. If yours isn't a true ¾" thick, you'll need to adjust the dado blade and spacing accordingly.

NARROW DADOES. Before moving on, the sides need a couple narrow dadoes. One near each end of the side panels houses a tongue on the top and bottom panels. Those tongues on the top and bottom are next up, as shown in Figure 1 at right. Simply bury a dado blade in an auxiliary rip fence to dial in the correct width for the rabbets. The back fits into a groove cut in the top, bottom, and sides. Figure 2 shows how I went about making these grooves at the table saw.

SLOTS. The pull-out tray has a couple of stops attached to its top face to prevent it from being pulled all the way out of the cabinet. To accommodate these stops, a couple of slots are needed in the top panel. I defined the ends of the slots by drilling a couple holes at the drill press. The waste between the holes is easy to remove with a jig saw (Figure 3). Clean up the saw marks with sandpaper so the stops will travel smoothly along their length.

TRIAL ASSEMBLY. Because there's a lot of parts to go together, I took the time at this point to do a test assembly. It's better to find any adjustments that are needed now rather than when you apply the glue. I also measured for the back panel and drawer dividers while my assembly was dry-clamped. They can then be cut to size.

SLIDES & GUIDES. Once the cabinet is assembled, the interior spaces will be a little tight to get into. So before jumping right into the assembly, I attached the case-side portion of the two-piece drawer slides to the inside of the side panels. Details 'c' and 'e' on the previous page show where to locate them.

A couple of hardwood tray guides go in the upper opening. These are made at the table saw (Figure 4) and glued in place. Details 'b' and 'd' on the previous page show their location.

STAGED ASSEMBLY. To better manage the assembly, start by gluing up one side, the bottom, two drawer dividers, and the center and top divider. After the glue dries, add the other two drawer dividers and the top. Slide the back into the grooves before adding the other side and clamping it securely.

Finally, add the edging strips to cover the exposed plywood edges. To connect the base and lower cabinet, flip both assemblies upside down and drive screws into the lower cabinet (Figure 5).

How-To: CUT THE GROOVES, RABBETS & SLOTS

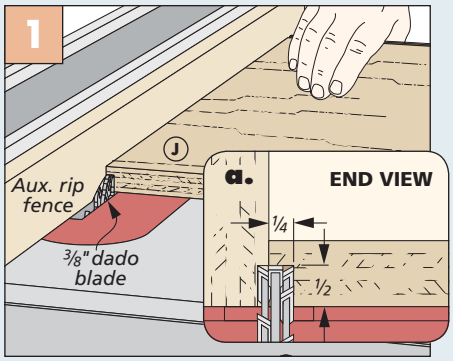

Rabbets. Create a rabbet on the ends of the top and bottom to form a tongue that fits in the sides.

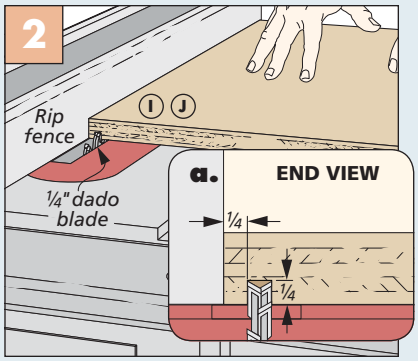

Groove for Back. A narrow dado blade makes quick work of cutting the groove for the back panel.

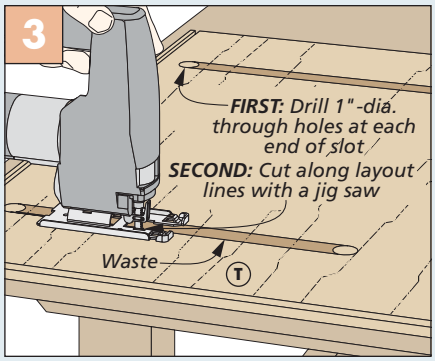

Slots in Top. After drilling holes at the ends of the slots, use a jig saw to remove the rest of the waste.

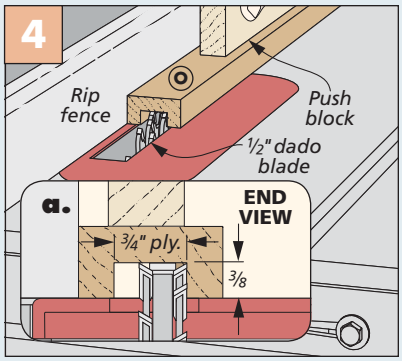

Tray Guides. A groove is needed on the guides. Flip the workpiece between cuts to center the groove.

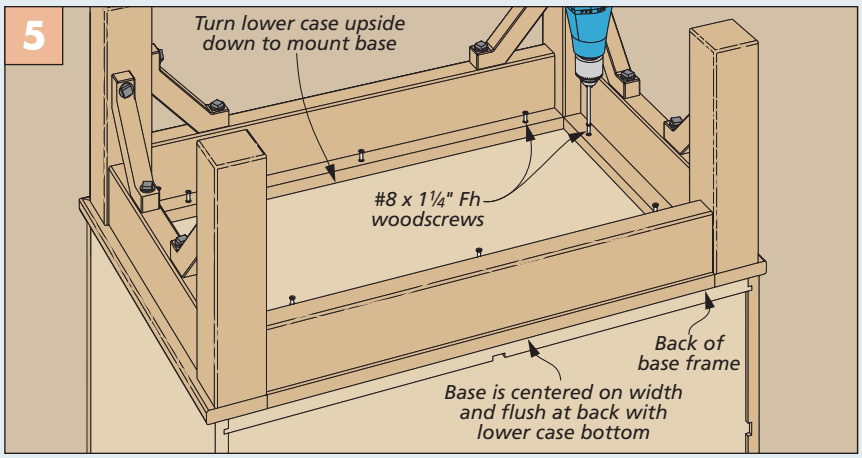

Attaching Base to Lower Cabinet. Turn the lower cabinet upside down and position the base as shown above. Drive the screws through the mounting holes in the base frame and into the bottom of the lower cabinet.

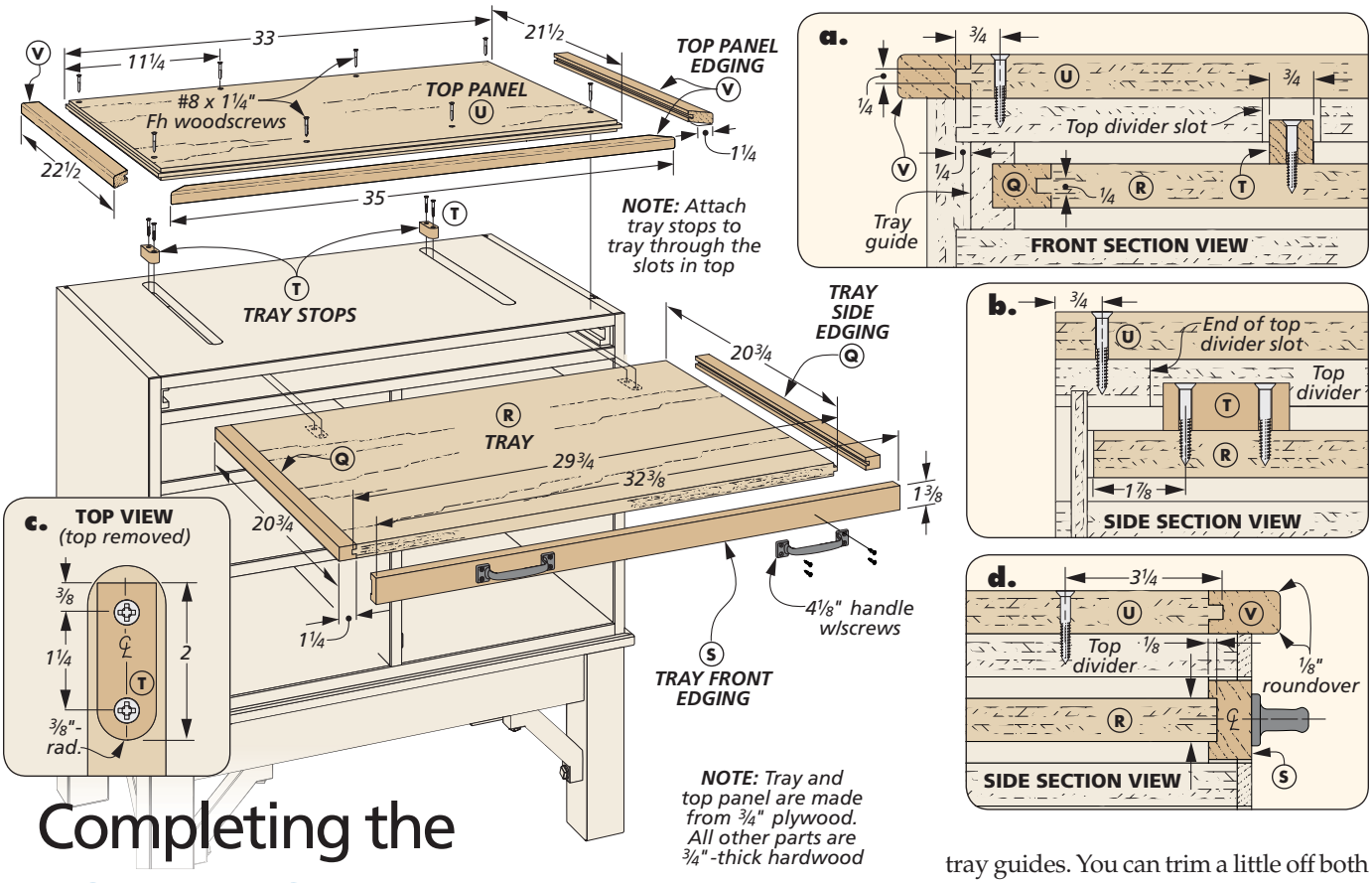

Completing the LOWER CABINET

Just a few more pieces are needed to finish up the lower cabinet. The pull-out tray and top panel are pretty straightforward. Then, you'll follow that up by making the six drawers.

PULL-OUT TRAY. The tray itself is nothing more than a piece of plywood cut to size. But first, I began with the tray side edging. These workpieces have a groove along the edge to fit over a tongue formed on the edge of the tray. Figures 1 and 2 cover how to complete all three of these pieces. After gluing the side edging in place, check the fit in the tray guides. You can trim a little off both sides for a sliding fit, if necessary.

The piece of edging for the front of the tray is next. A centered groove along one face of this piece (Figure 3) slips over the front edge of the tray.

TRAY STOPS. The two tray stops are the next parts to make (details 'a' and 'c'). I rounded the ends of a long blank before cutting the stops to size. To attach them, slip the tray in place

How-To: MAKE THE PULL-OUT TRAY

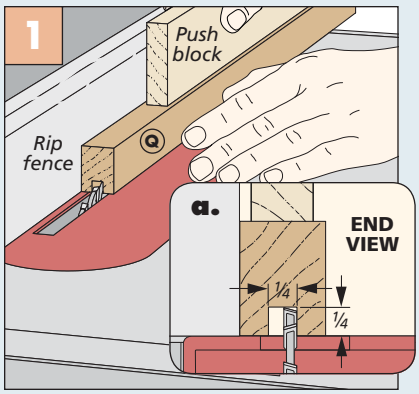

Grooves. Cut a centered groove in the tray side edging. Turn the piece end for end between passes.

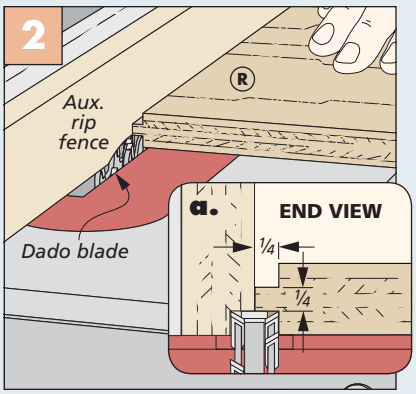

Tray Rabbets. Use a dado blade buried in an auxiliary rip fence to form the tongues on the tray sides.

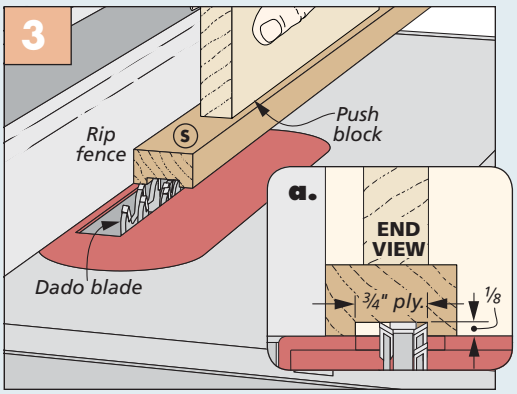

Edging Groove. A dado blade makes it easy to form the groove in the tray front edging. Make two passes to center the groove.

in the guides, position the stops on the tray, and drive the screws home through the slots in the top.

TOP PANEL. Finally, cut the top panel and edging pieces to size. You'll use the same tongue and groove procedure to attach the edging that was used on the tray side edging. Refer back to Figures 1 and 2 on the previous page for the details.

After mitering the front corners of the edging, glue it in place to the top panel and ease the outside edges. Screws are all that's needed to secure the top panel to the case. I didn't use glue in case the tray ever needs to be removed.

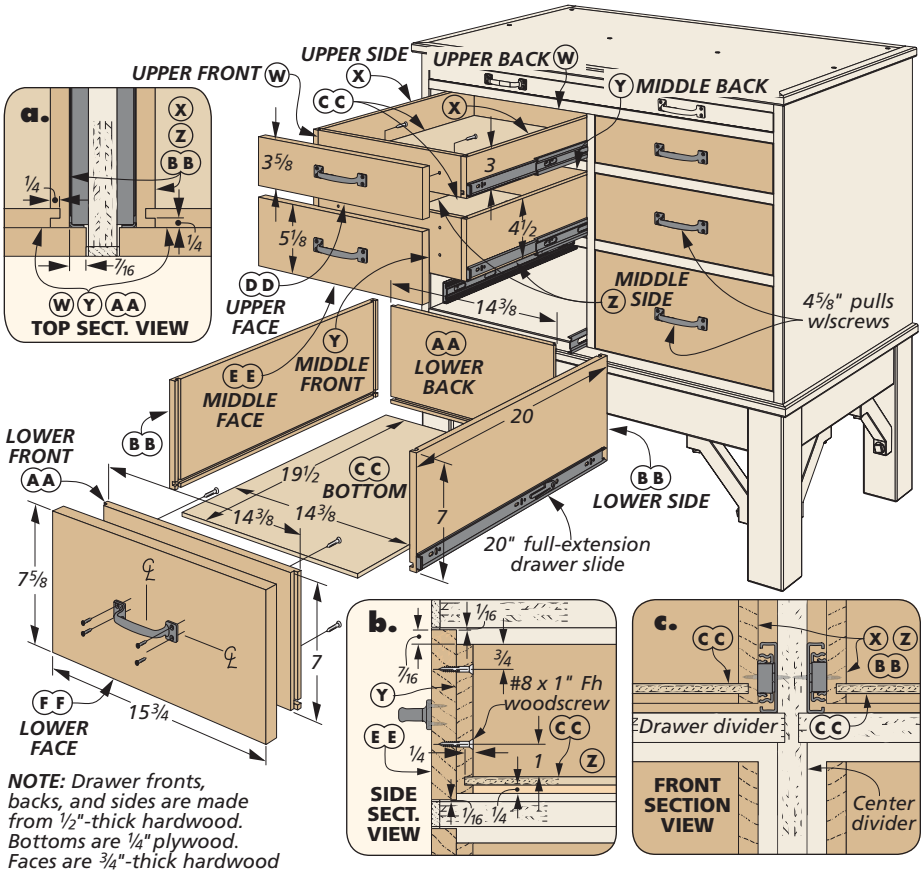

NOTE: Drawer fronts, backs, and sides are made from 1/2"-thick hardwood. Bottoms are 1/4" plywood. Faces are 3/4"-thick hardwood

DRAWERS

Making the lower cabinet fully functional requires adding the six drawers. While there are three different drawer heights, the building process is simplified by the fact that they all use the same joinery. False drawer fronts made from hardwood provide a uniform appearance and are easy to install.

STAY ORGANIZED. The best way to approach the drawer construction is to cut all of the drawer fronts, backs, and sides to size up front. To keep them organized, be sure to label everything before moving on to cutting joinery.

The How-To box below walks you through the steps for cutting the dadoes, grooves, and tongues needed for the drawer boxes. All of this can be accomplished at the table saw using a narrow dado blade.

With the bones of the drawers complete, cut the drawer bottoms to size from 1/4" plywood. (All six bottoms are the same size.) Now assemble the drawers with glue and clamps.

DRAWER SLIDES. Since the cabinet side of the two-piece drawer slides are already installed in the cabinet, it's a snap to position the drawer side of the slides and screw them in place. The positioning is shown in details 'a' and 'c,' above.

The false drawer fronts are the final pieces to add. I cut matching pieces from the same board to give the appearance of continuous grain across the front. Position the false fronts so they're centered in the drawer openings. To install them, I used double-sided tape to hold them in place and drove in screws from inside the drawer.

How-To: CUT THE DRAWER JOINERY

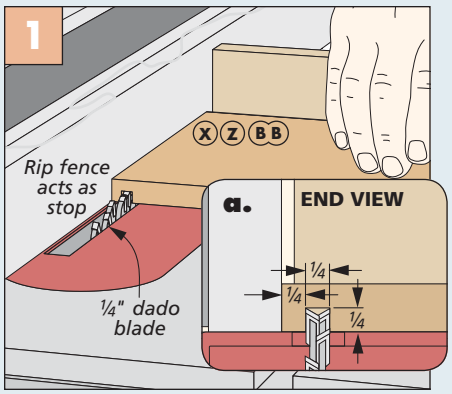

Dado Drawer Sides. Use a stop block clamped to an auxiliary fence to locate the dadoes in all of the drawer sides.

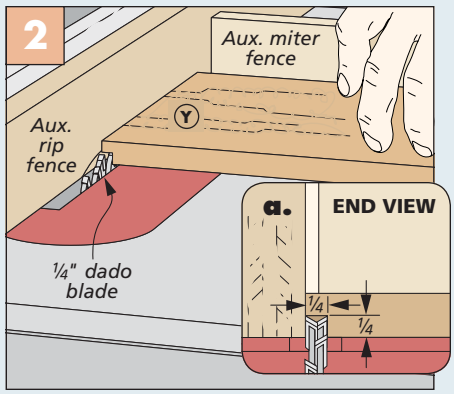

Rabbet Fronts & Backs. Rabbet the ends of the drawer fronts and backs to create mating tongues.

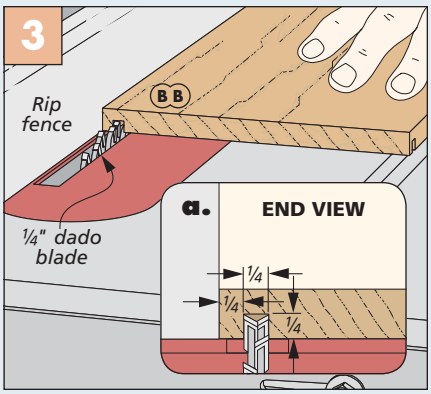

Bottom Grooves. With the dado blade still in the saw, cut the grooves for the bottom in the front, back, and sides.

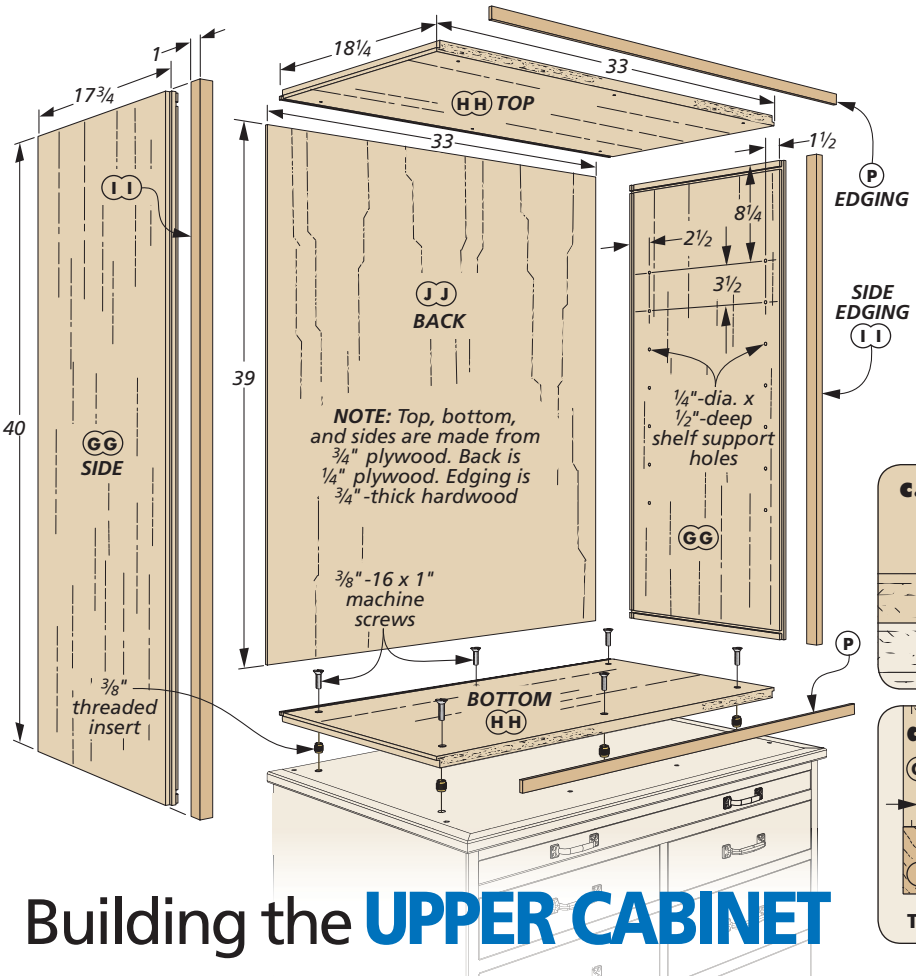

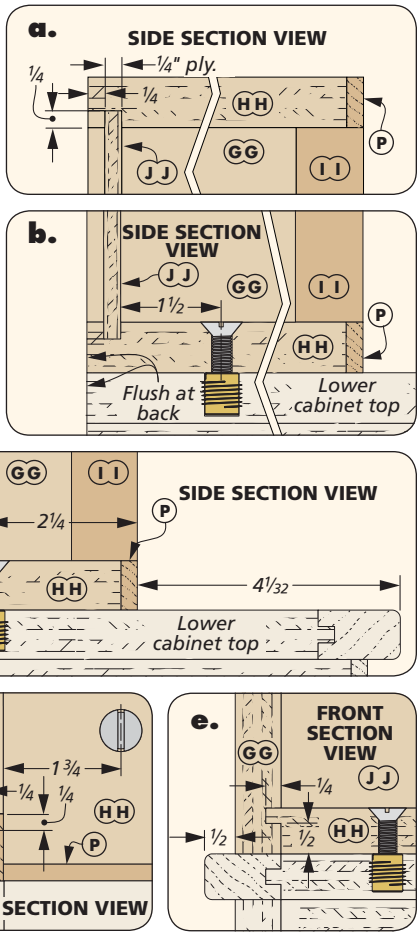

Building the UPPER CABINET

With the pull-out tray and the drawers installed in the lower cabinet, you can turn your attention to the upper cabinet. It's nothing more than a large plywood box with three adjustable shelves edged with hardwood.

At this point, the construction should look pretty familiar. Like the lower cabinet, the upper cabinet incorporates a series of dadoes, grooves, and tongues to hold things together. And since both sides, as well as the top and bottom, are mirror images of one another, setting up and cutting this joinery is pretty straightforward.

UPPER PARTS. After cutting your parts to size for the sides, top, and bottom, follow the How-To box below for creating

How-To: CUT THE UPPER CABINET JOINERY

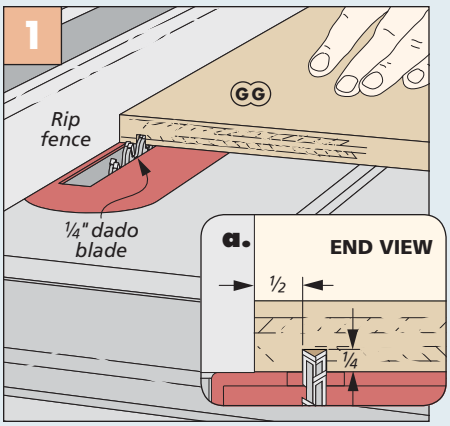

Side Dadoes. The narrow dadoes in the sides to accept the top and bottom are cut at the table saw.

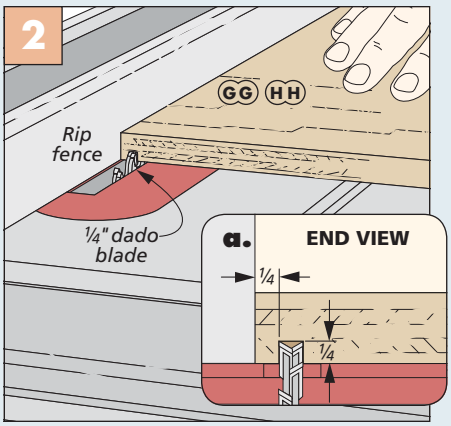

Groove for Back. Stick with the same dado blade to make the grooves in the top, bottom, and sides for the back.

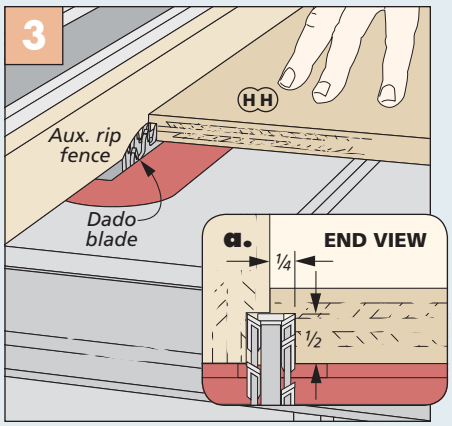

Rabbets. A dado blade buried in an auxiliary rip fence helps to create the tongues on the top and bottom.

the dadoes, grooves, and rabbets in all four workpieces. Before moving on, I also took the time to lay out and drill the holes in the sides for the shelf supports.

THICK EDGING. One deviation from the lower cabinet construction is the need for the thick edging that you see on the front edge of the sides (details 'c' and 'd' on the previous page). The reason for the thick edging is to create a solid mounting point for the continuous hinges that attach the doors you'll add later on.

I used a simple tongue and groove approach for attaching the edging. Figures 1 and 2 below show the setups. With the joinery finished, attach these pieces with glue and clamps.

ASSEMBLY TIME. After cutting the back to size, the case is ready for assembly. I found it easiest to lay one of the sides on my workbench and set the top and bottom in place. The back slips into the grooves before adding the other side. When the clamps come off, the edging for the top and bottom can be cut to fit and glued in place.

ATTACH CABINETS. Because I knew the potential existed that I'd need to move my cabinet some day, I wanted to make it easy to take apart. To that end, I used large machine screws and threaded inserts to hold the cabinets together.

Using the information in the main drawing on the previous page, lay out and drill the holes for the screws, first. Then position the upper cabinet and mark for the inserts through the screw holes. For a tip on installing the inserts, turn to Shop Notes on page 66.

THREE STURDY SHELVES. As I mentioned earlier, I plan on storing most of my hand-held power tools inside the upper cabinet. To support all of that weight, I opted to edge my shelves with the L-shaped hardwood edging you see above. Figure 3 provides the details for cutting this at the table saw.

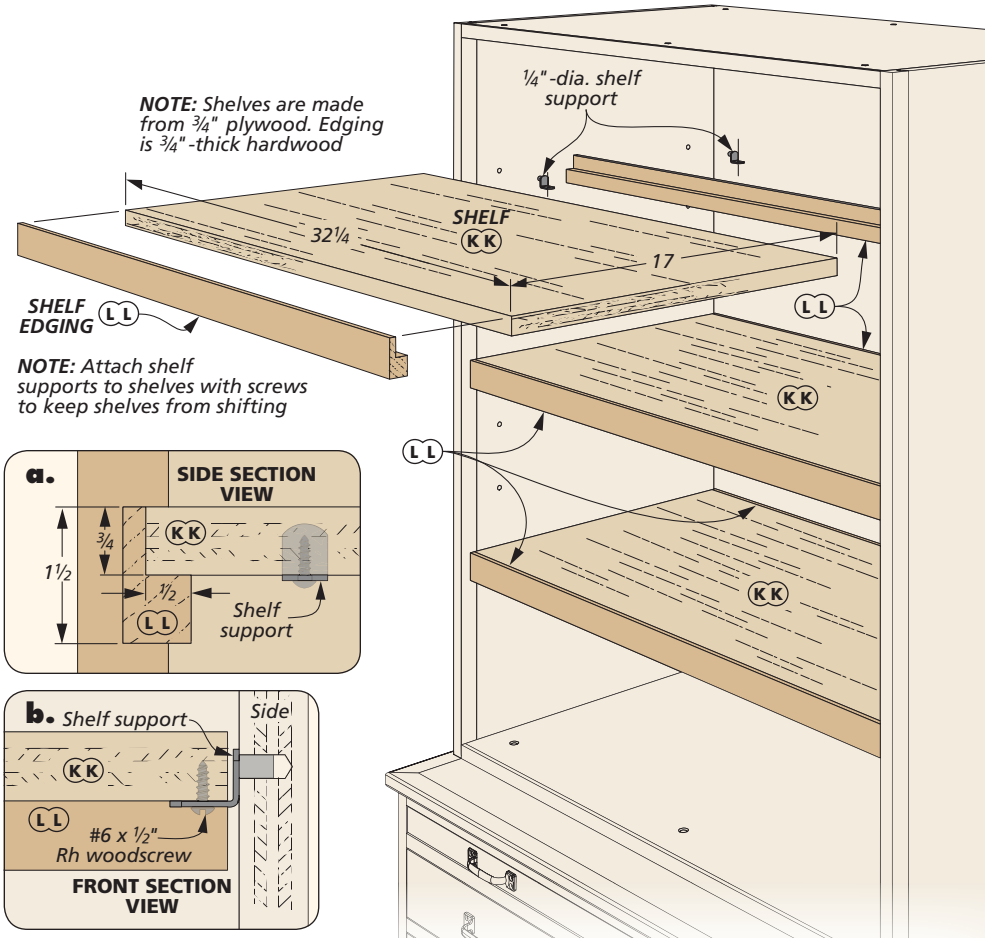

How-To: MAKE THE CABINET EDGING & SHELVES

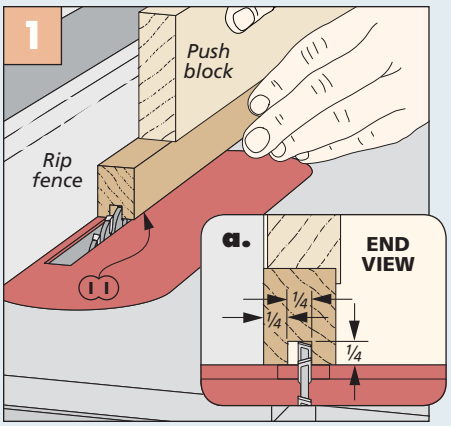

Centered Groove. Cut the groove in the side edging in two passes at the table saw to center it on the workpiece.

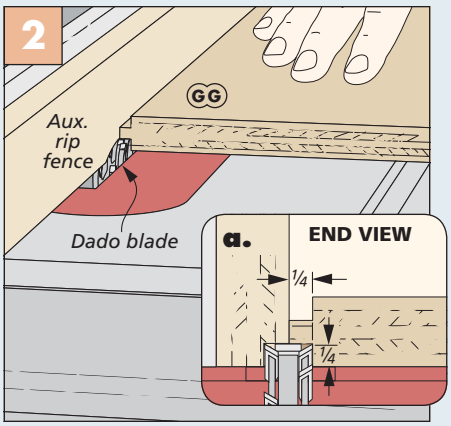

Rabbet Sides. Switch to a dado blade to cut the rabbets on the front edges of the sides. The tongues fit in the edging.

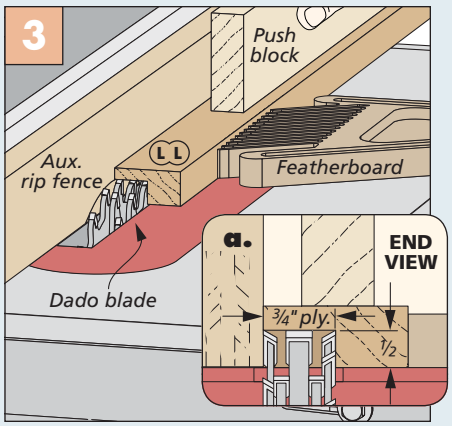

Wide Rabbets. The edging for the shelves requires a wide rabbet to cover the exposed plywood shelf edges.

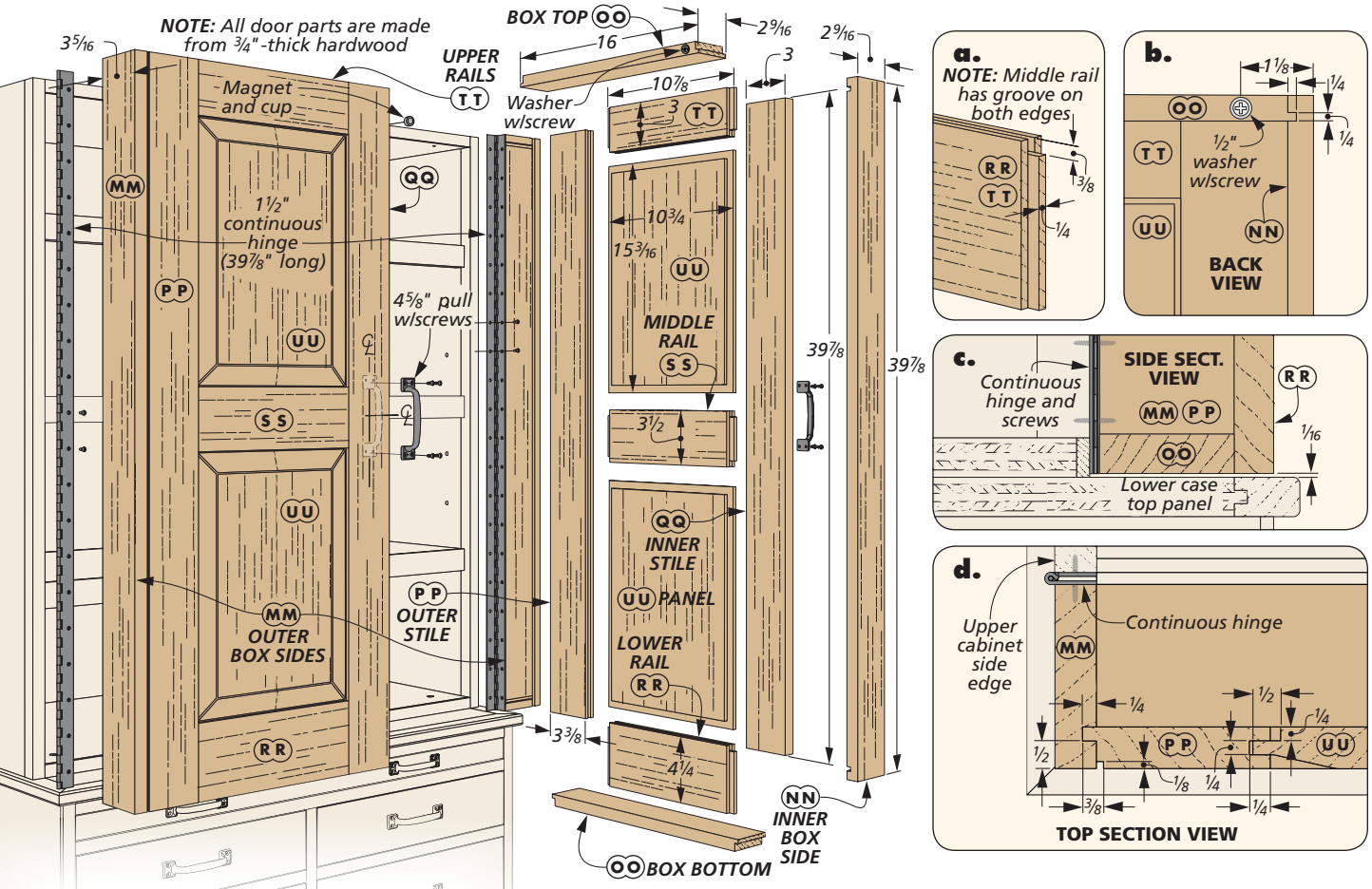

Assembling the DOORS

As you can tell, there's been no shortcuts taken in the construction of this heirloom shop project. That attention to detail holds true when it comes to the design of the pair of deep doors that enclose the upper cabinet.

The doors are made by constructing two separate components and then joining them together. The first is a simple four-sided box. On top of the box is a frame and panel assembly that's held together using stub tenon and groove joinery. The raised panels add the final touch of craftsmanship.

DOOR BOXES. I started the door construction by making the parts for the two boxes. Be sure to note that the outer box sides are wider than the rest of the box parts. This allows space for a groove in the outer sides where the frame assemblies attach to the boxes.

How-To: CUT DOOR BOX GROOVES & DADOES

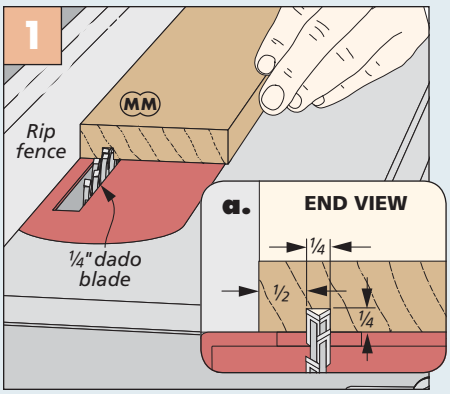

Groove Outer Box Sides. Use a narrow dado blade to cut the grooves in the outer box sides to hold the frames.

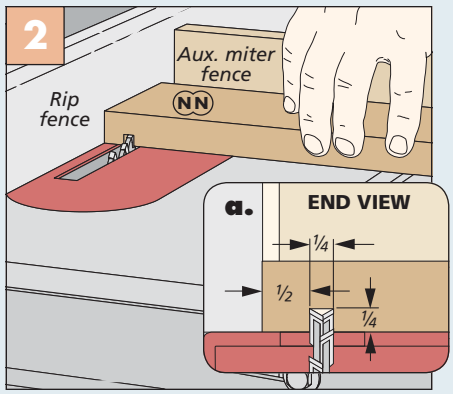

Through Dadoes. To cut the through dadoes in the inner box sides use the miter gauge to guide the workpiece.

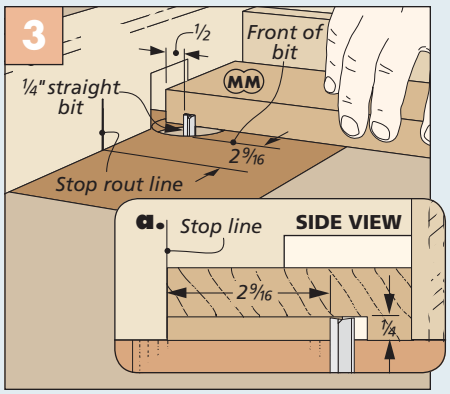

Stopped Dadoes. To cut the stopped dadoes in the outer box sides, make a stop mark on the router table fence.

This will make more sense when the frames are added shortly.

The majority of the joinery for the door box parts can be cut at the table saw, as shown in Figures 1 and 2 on the previous page. The outer box sides, however, have stopped dadoes on either end. A trip to the router table is needed to make these cuts (Figure 3).

After cutting the rabbets on the ends of the box top and bottom, I assembled the two door boxes. These can be set aside while you turn your attention to the frame and panel assemblies.

FRAME & PANEL. As I mentioned earlier, these assemblies use stub tenon and groove joinery on the stiles and rails. Figures 1 and 2 at right provide all of the details for cutting the edge grooves on the frame parts and making the tenons on the rails.

STILE DETAILS. The outer stiles require a couple more cuts to finish them up. These cuts form a stepped rabbet, as shown in detail 'd' on the previous page. This design detail creates a shadow line when the frames are assembled.

Figure 3 shows the setup for making the rabbet along the outside edge to create a tongue that'll fit into the outer box side. Reset the rip fence and lower the table saw blade to make the smaller rabbet (Figure 4).

RAISED PANELS. You can now turn your focus to the raised panels for the doors. If you have access to a wide board to create these panels, that's great. If not, you can glue up narrower boards, just be sure to pay close attention to the grain configuration to get the best match possible.

Once you have the four panels sized, head over to the router table to form the bevel on the face of the panels (Figure 5). Check out Sources on page 67 for information on the raised panel bit that I used for my panels.

You'll then head back to the table saw to make the rabbets on the back face of the raised panels (Figure 6). Sneak up on the final depth of these rabbets to arrive at a snug fit in the stile and rail grooves.

ASSEMBLE DOORS. After applying a finish to the panels, I glued up the door frame assemblies first. When they come out of the clamps, they can then be glued to the door boxes by slipping the tongue in the outer stiles into the grooves in the outer box sides. The rest of the frame is face glued to the door boxes.

The last piece of the door construction is to attach them to the upper case with continuous hinges. Shop Notes on page 66 shows the method I used to do this. You can then add the door pulls and magnetic catches before moving on.

How-To: MAKE THE DOOR FRAMES & PANELS

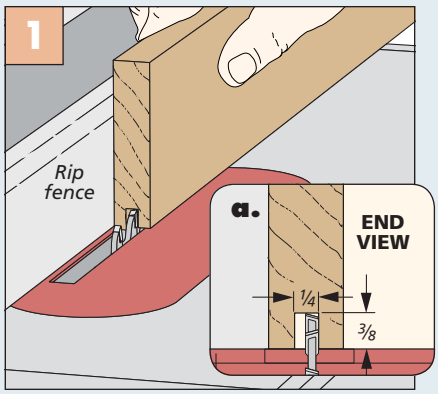

Rail & Stile Grooves. Creating the centered grooves in the rails and stiles is also done at the table saw.

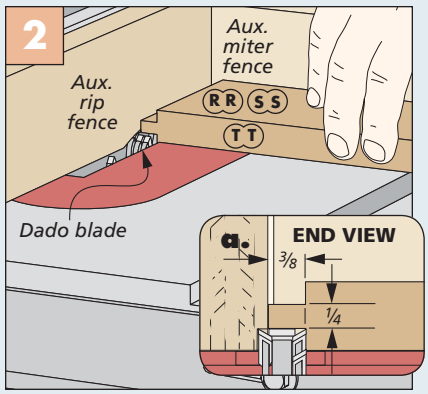

Stub Tenons. Bury a dado blade in an auxiliary rip fence to create the stub tenons at the table saw.

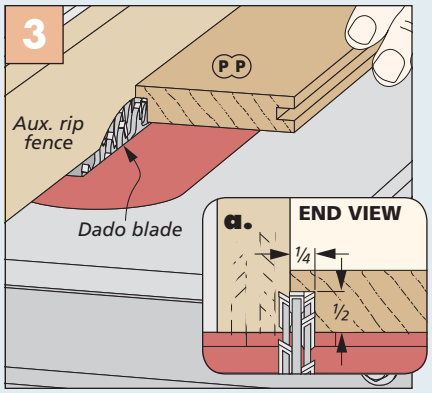

Rabbet Outer Stiles. Put the auxiliary fence back on the table saw to aid in cutting the rabbets in the outer stiles.

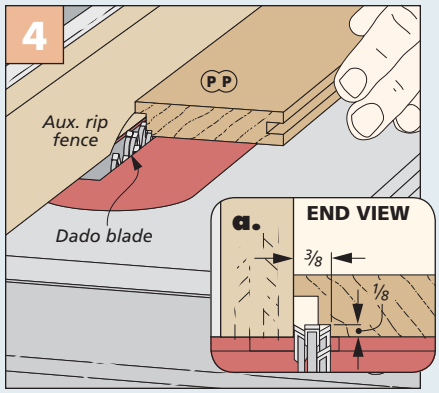

Shadow Rabbet. Simply reposition the fence to cut the second rabbet that creates the shadow affect in the door.

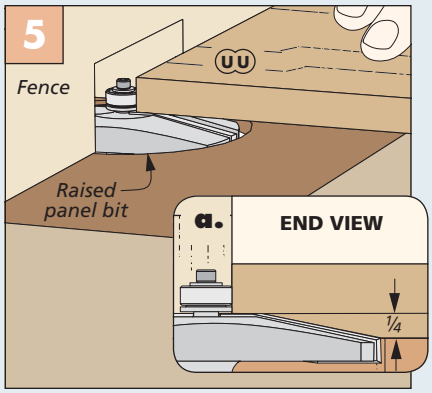

Panel Profile. With the raised panel bit in the router table, make a few passes to bevel the face of the panel.

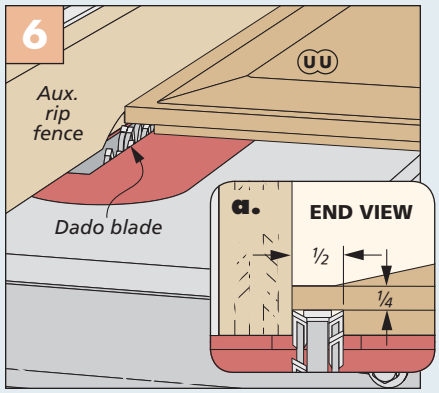

Rabbet Door Panel. Head back to the table saw to cut the rabbets around the back of the door panel.

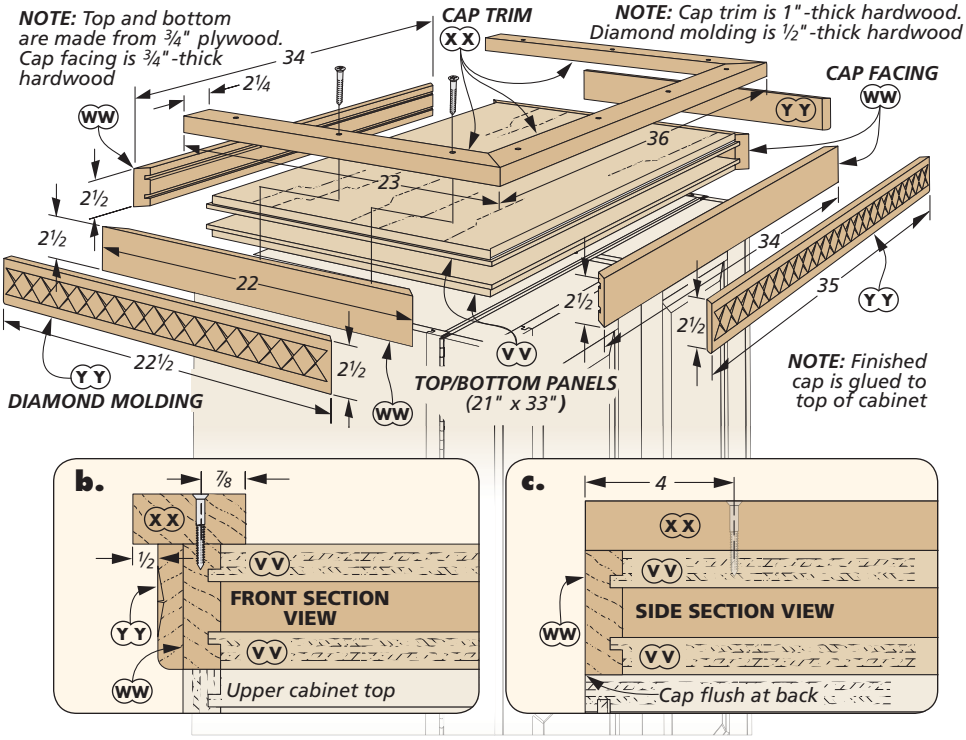

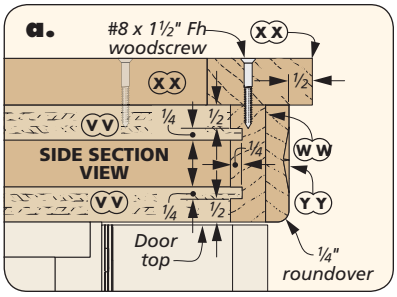

Finish with the CARVED TOP

With the doors installed, it's tempting to call this project done. But I wanted a truly artisan piece for my shop. And that meant creating a cap with a custom-carved molding treatment.

If you've never done any carving before, you might feel a little intimidated with the thought. But not to worry. This design requires a simple layout, and all of the work can be done with one chisel and a couple of easy-to-master techniques. (For more on this, turn to page 16). The whole process is quite simple (photo on next page).

CAP FOUNDATION. Before starting on the carved molding, though, the underlying base pieces require a little bit of work, first. The How-To box at the top of the next page shows the details for cutting the joinery on the caps and facing pieces. A simple trim piece is mitered on the ends and tops off the cap (detail 'b').

FINAL DETAILS. After the carving work is done, you can attach these pieces to the facing with glue. Then all you need to do is finish the rest of the cabinet and start filling it with tools. To find out more about the finish I used, as well information about the hardware for this project, check out Sources on page 67. W

Materials & Supplies

A	Leg Cores (4)	1½ x 1½ - 13
B	Leg Skins (16)	¾ x 3 - 13
C	Long Rails (2)	1½ x 3½ - 31
D	Short Rails (2)	1½ x 3½ - 19
E	Base Frame Front (1)	¾ x 3½ - 35
F	Base Frame Sides (2)	¾ x 3½ - 22½
G	Base Frame Back (1)	¾ x 3 - 28
H	Knee Braces (6)	1⅛ x 2³⁄₁₆ - 7⅞
I	Sides (2)	¾ ply. - 21¾ x 22
J	Top/Bottom (2)	¾ ply. - 21¾ x 33
K	Top Divider (1)	¾ ply. - 21¼ x 33
L	Center Divider (1)	¾ ply. - 21¼ x 18¾
M	Drawer Dividers (4)	¾ ply. - 21¼ x 16⅜
N	Back (1)	¼ ply. - 33 x 21
O	Tray Guides (2)	¾ x 1½ - 20¾
P	Edging	¼ x ¾ - 280 rgh.
Q	Tray Side Edging (2)	¾ x 1¼ - 20¾
R	Tray (1)	¾ ply. - 20¾ x 29¾
S	Tray Front Edging (1)	¾ x 1⅜ - 32⅜
T	Tray Stops (2)	¾ x ¾ - 2
U	Top Panel (1)	¾ ply. - 21½ x 33
V	Top Panel Edging	¾ x 1¼ - 85 rgh.
W	Upper Dwr. Front/Back (4)	½ x 3 - 14⅜
X	Upper Dwr. Sides (4)	½ x 3 - 20
Y	Mid. Dwr. Front/Back (4)	½ x 4½ - 14⅜
Z	Mid. Dwr. Sides (4)	½ x 4½ - 20
AA	Lower Dwr. Front/Back (4)	½ x 7 - 14⅜
BB	Lower Dwr. Sides (4)	½ x 7 - 20
CC	Dwr. Bottoms (6)	¼ ply. - 14⅜ x 19½
DD	Upper False Fronts (2)	¾ x 3⅝ - 15¾
EE	Mid. False Fronts (2)	¾ x 5⅛ - 15¾
FF	Lower False Fronts (2)	¾ x 7⅝ - 15¾
GG	Upper Sides (2)	¾ ply. - 17¾ x 40
HH	Upper Top/Bottom (2)	¾ ply. - 18¼ x 33
II	Side Edging (2)	¾ x 1 - 40
JJ	Upper Back (1)	¼ ply. - 33 x 39
KK	Shelves (3)	¾ ply. - 17 x 32¼
LL	Shelf Edging (6)	¾ x 1½ - 32¼
MM	Outer Box Sides (2)	¾ x 3⁵⁄₁₆ - 39⅞
NN	Inner Box Sides (2)	¾ x 2⁹⁄₁₆ - 39⅞
OO	Door Box Top/Bottom (4)	¾ x 2⁹⁄₁₆ - 16
PP	Outer Stiles (2)	¾ x 3⅜ - 39⅞
QQ	Inner Stiles (2)	¾ x 3 - 39⅞
RR	Lower Rails (2)	¾ x 4¼ - 10⅞
SS	Middle Rails (2)	¾ x 3½ - 10⅞
TT	Upper Rails (2)	¾ x 3 - 10⅞
UU	Door Panels (4)	¾ x 10¾ - 15³⁄₁₆
VV	Cap Top/Bottom (2)	¾ ply. - 21 x 33
WW	Cap Facing	¾ x 2½ - 120 rgh.
XX	Cap Trim	1 x 2¼ - 96 rgh.
YY	Diamond Molding	½ x 2½ - 96 rgh.

- (12) ⁵⁄₁₆"x 2" Squarehead Lag Screws
- (12) ⁵⁄₁₆" Washers
- (8) 4⅝" Handles w/screws
- (2) 4⅛" Handles w/screws
- (2) 1½" x 40" Cont. Hinges w/screws
- (12) ¼" Shelf Supports
- (6 prs.) 20" Drawer Slides w/screws
- (6) ⅜" Threaded Inserts
- (6) ⅜"-16 x 1" Machine Screws
- (46) #8 x 1¼" Fh Woodscrews
- (24) #8 x 1" Fh Woodscrews
- (10) #8 x 1½" Fh Woodscrews
- (12) #6 x ½" Rh Woodscrews
- (4) ½"-dia. Rare-Earth Magnets
- (4 prs.) ½" Cups & Washers for Magnets

How-To: CUT RABBETS & DOUBLE GROOVES

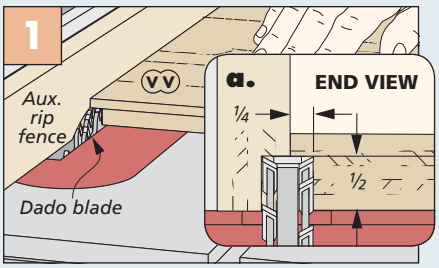

Rabbet Edges. It's back to the table saw to cut the rabbets around the perimeter of the top and bottom.

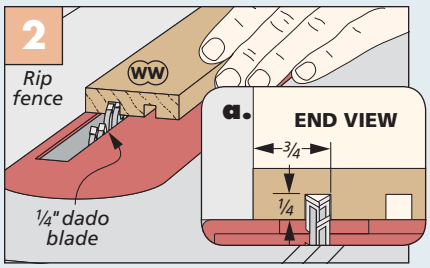

Double Grooves. A pair of grooves on the cap facing fit over the tongues on the top and bottom.

▲ Check out the article on page 16 for all of the details about creating the diamond-shaped carving pattern that wraps the top.

Cutting Diagram

¾" x 3" - 96" Rift-Sawn White Oak (2.0 Bd. Ft.)

¾" x 6" - 96" Rift-Sawn White Oak (Two boards @ 4.0 Bd. Ft. each)

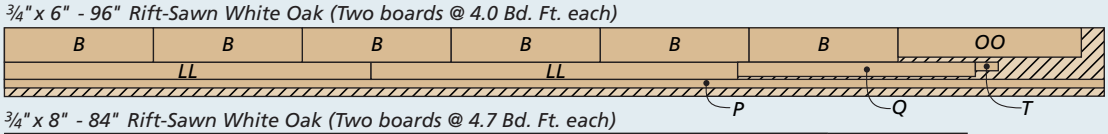

¾" x 8" - 84" Rift-Sawn White Oak (Two boards @ 4.7 Bd. Ft. each)

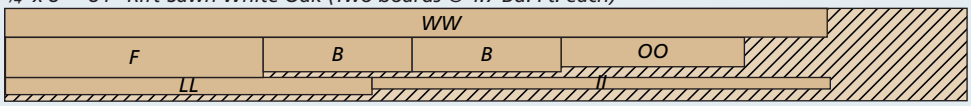

¾" x 6" - 96" Rift-Sawn White Oak (4.0 Bd. Ft.)

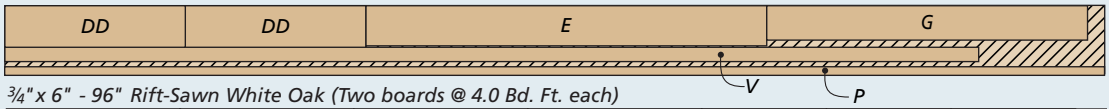

¾" x 6" - 96" Rift-Sawn White Oak (Two boards @ 4.0 Bd. Ft. each)

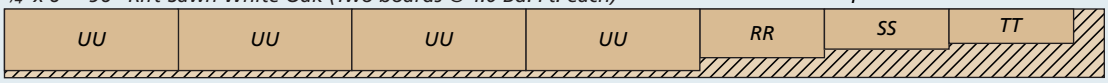

¾" x 7" - 96" Rift-Sawn White Oak (Two boards @ 4.7 Bd. Ft. each)

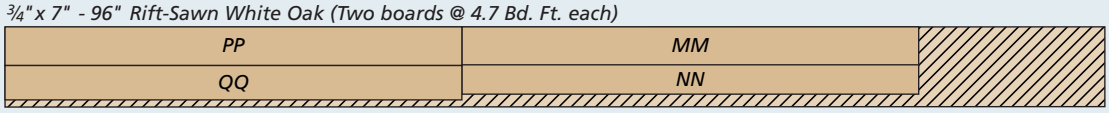

¾" x 6" - 72" Rift-Sawn White Oak (3.0 Bd. Ft.)

1½" x 6" - 72" Rift-Sawn White Oak (Two boards @ 4.5 Bd. Ft. each)

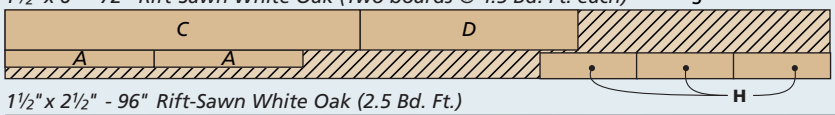

NOTE: *Parts H, XX, and YY are planed to final thickness*

1½" x 2½" - 96" Rift-Sawn White Oak (2.5 Bd. Ft.)

½" x 3½" - 72" Hard Maple (Two boards @ 1.8 Sq. Ft. each)

½" x 5" - 72" Hard Maple (Two boards @ 2.5 Sq. Ft. each)

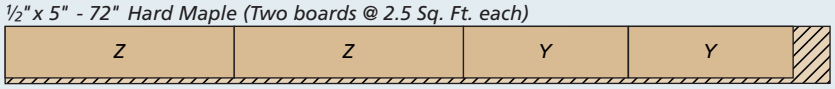

ALSO NEEDED: *Three 48" x 96" sheets of ¾" rift-sawn white oak plywood. Two 48" x 96" sheets of ¼" rift-sawn white oak plywood*

½" x 7½" - 72" Hard Maple (Two boards @ 3.8 Sq. Ft. each)

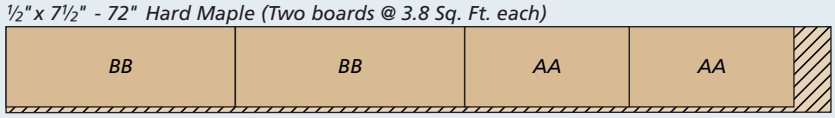

¾" x 2" - 48" Hard Maple (.7 Bd. Ft.)

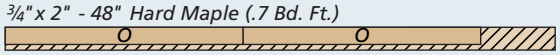

rip hardwood with a Track Saw

At first glance, a track saw looks pretty similar to a circular saw. However, circular saws are built for the rough-and-tumble needs of a construction site. Track saws on the other hand, are designed for highly accurate work and making clean cuts right from the start.

WORKING WITH HARDWOOD. The chief use of track saws has been to ease the strain of cutting sheet goods. You no longer need to hoist large panels up onto a table saw to make accurate cuts. Those same traits can be applied to working with hardwood lumber, too. So if you've been using a track saw strictly for plywood, here are a couple ways to get even more from this versatile power tool.

TRACK SAW ADVANTAGES. Track saws have several features that make them stand apart from their circular saw cousins. The main advantage is how the track and saw work together. The saw interlocks with the track to guarantee straight, smooth cuts. The edge of the track indicates the location of the cut. Simply line up the track with the layout line and you're good to go.

Another important feature is plunge-cutting. The operator flips a lever to lower the blade to a preset depth, as shown in the upper left drawing. Limiting blade exposure increases safety and reduces the chance for kickback.

Finally, track saws are designed so that as the blade is tilted, it stays inline with the track (right drawing). So making bevel cuts requires less fussing.

Plunge-cutting saws can be set to cut to precise depths and keep the blade concealed

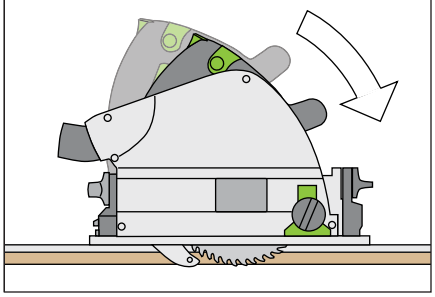

The blade of the saw stays aligned with the track no matter the angle

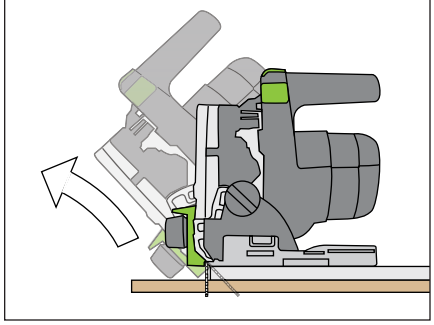

RIPPING

The guide track and smooth-cutting blade shine when put to use in ripping wide boards. Since the board remains stationary, it's less of a hassle to make a cut.

STRAIGHT LINE CUTS. One of the challenges of working with rough lumber is creating a straight reference edge. The photo on the previous page shows how a track saw simplifies the process. Just clamp the track in place on a layout line and make the cut. A sacrificial piece of plywood under the workpiece prevents you from cutting into the top of your workbench. The key here is that the board needs to be wide enough to provide adequate support for the track.

One benefit to this technique is that you can use it to create a workpiece where the grain flows straight down the length of the board. This results in a board that will look better in the completed project.

NARROW CUTS. Making a single rip cut is one thing. Things get tricky when it comes to cutting multiple, narrow workpieces. There isn't much support for the track and measuring and setting up for each cut becomes time-consuming.

The solution is to make a ripping jig like the one shown in the drawing above. The jig supports both the track and offers a means of registering a workpiece to make multiple, identical cuts. It consists of four parts: a base, a guide, a stop, and a fence.

The guide and stop are adjustable to set the width of cut and offer support for the track when making narrow cuts.

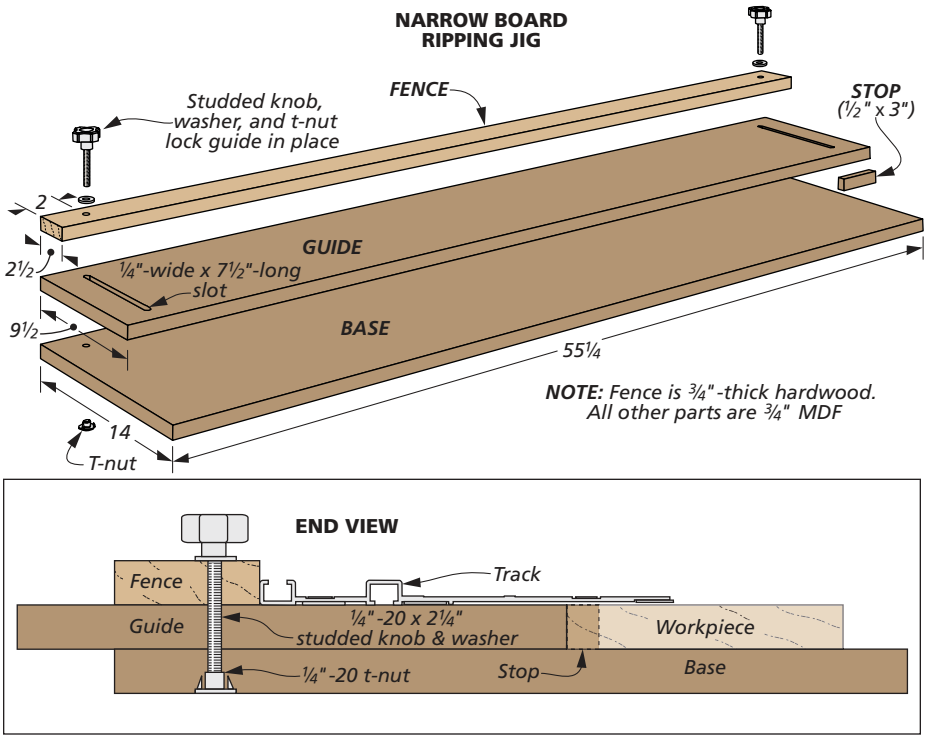

The fence registers the saw track for making the cut consistently.

I made the jig to work with the standard length of track, but you can make it suit any length of track. Also, I work with ¾"-thick material most often, so the guide is made from ¾" MDF. To use the jig for another thickness, you'll need to make a guide to match in order to provide support for the track.

USING THE JIG. The jig is simple to use. Place the track on the guide and against the fence. Use a combination square to set the guide for the width of cut, as shown in the left photo below.

After locking down the guide, slide the workpiece into place against both the guide and stop. Place the track on top and snug against the fence. Rubber grip strips on the bottom of the track along with the guide and stop keep the workpiece from shifting during a cut, as shown in the lower right photo. When the cut is complete, you can remove the workpiece, slide the board over and repeat as necessary.

A track saw excels at making smooth, straight cuts. With a little creativity, you can get more out of this handy tool when working with solid wood. W

▲ Use a combination square to set the position of the guide at each end. Reference the square off the edge of the saw track.

▲ This benchtop ripping jig makes it easy to cut narrow parts using a track saw. The adjustable guide, stop, and saw track keep the workpiece secure as you make a cut. The guide also supports the track to keep the saw balanced.

great Glue Options

Most of the time, a bottle of yellow wood glue sits close by on my bench ready for action. I use it on just about every project I make, and with good reason. Yellow glue is strong, easy to use, versatile, and inexpensive.

That doesn't mean it's ideal for every situation, though. Over time, I've found that it's a good idea to keep a special-purpose glue (or two) on hand to tackle specific situations. The problem is there are so many woodworking-related glues to choose from. If you're starting out, the options can easily overwhelm you. To help guide your decision-making, I took a look through the shop to find the "other" glues I keep on hand.

◄ Liquid hide glue increases the time you have to get an assembly together and clamped.

SLOW-SET GLUE. One of the factors that makes assembly time stressful is the "shot clock" counting down the time before the glue starts to set up. Exceed the time limit, and the glue joint may not be as strong or the glue won't hold at all. In these situations, a glue that offers more open time can save the day.

One common slow-setting glue is liquid hide glue (left photo). This glue provides up to 30 minutes before you need to have the joints closed and clamped.

SPRAY CONTACT ADHESIVE. On the other hand, there are times you want glue to set up faster. One challenge of using wood glue is having the patience to wait while the glue dries. Depending on the task, one way to speed things along is to use spray contact adhesive.

▲ Spray contact adhesive works great for laminating large, flat materials together in a short time.

You may be familiar with this type of glue for applying plastic laminate to a surface. However, I've found that it comes in handy for other applications, as well. One of those is laminating panels into thicker stock.

Gluing large surfaces with wood glue requires a lot of glue, and it can be difficult to apply even clamping pressure. With spray adhesive however, all you need to do is apply an even coat to the mating surfaces. After a few seconds, the glue is "dry," and the parts can be assembled. The glue bonds on contact, and you can move on to the next steps.

COLD PRESS VENEER GLUE. Veneer takes almost any project from ordinary to extraordinary. But applying veneer comes with its own set of obstacles. One of those relates to how thin veneer is. Typical wood glue often bleeds through and leaves shiny highlights of glue behind. These imperfections resist stain and finish and distract from the look.

In order to solve the problem of bleed-through, I like to use cold press veneer glue. It's a version of wood glue that has resin fiber additives that increase viscosity. This minimizes glue bleeding. In addition, the fibers act as a filler that helps any glue that does bleed through appear more like the wood around it.

The name comes from its application. You apply the glue to the substrate, lay the veneer, and then clamp it between flat panels. There's no need to heat either the glue or the assembly while it cures. It also works well in a vacuum bag.

EPOXY. Most of my projects involve gluing wood parts to other wood parts. But in some instances, you need to join other materials to wood, as shown in the lower left photo. The adhesive of choice here is two-part epoxy. After mixing the two components together, you can bond just about any material. I use it for building shop jigs and tools and securing hardware to furniture projects. One rule of thumb to keep in mind is that the longer the epoxy takes to cure, the stronger the resulting bond will be.

Epoxy also offers a nice side benefit — it's waterproof. So I turn to it for building outdoor projects from wood.

MOLDING & TRIM GLUE. Earlier, I talked about how a slow-setting glue takes the stress out of a complicated glueup. There are occasions where the opposite characteristic is required. When applying molding to a project, the profiled surface means it's tough to add a clamp without marring the workpiece. Ordinary wood glue doesn't set up fast enough to hold the piece in place.

Enter molding and trim glue. The glue shown here is a formulation of regular wood glue that's much thicker and "grabs" after holding a piece in place for only a few seconds. The thick consistency means the glue doesn't run and dribble off the workpiece during application or when pressing the workpiece into position. To avoid squeezeout, apply the glue sparingly.

Woodworking glues are problem-solvers for building long-lasting projects. The good thing is you don't need every type available. With just two or three glues, you can confidently tackle the assembly tasks you face. W

▲ To prevent glue from seeping through thin veneer, cold press glue contains special additives that increase the viscosity of the adhesive while still creating a strong, solid bond.

▲ Whether it's installing hardware or joining other metal parts, epoxy forms a rigid bond with most shop materials.

▲ Thick glue designed for molding allows you to skip clamps altogether. Just hold the part in place for a few seconds.

workflow in a Small Shop

Everyone starting a journey in woodworking faces the same challenge: shop space. Or, more accurately, the lack of it. Space management is often overlooked when setting your first woodworking goals. But if you take some time to plan your space to suit the projects you want to make, you'll be happier in the long run.

WORKFLOW BASICS. Building any project in your shop typically unfolds in four stages: Lumber storage and breakdown, milling and joinery, sanding and assembly, and last but not least, finishing. In each of these stages, certain tools are required to perform each task. And along with each of the tools comes an operating zone (as you can see in the drawing below and the top of the next page). This zone is the area around the tool that's required to safely operate the machine. In a small shop, these zones are naturally going to overlap. The goal is to anticipate and plan for the amount of setup that has to happen along the way.

SITE SURVEY. To start, what is the shop footprint you're dealing with? A common size is about 12' x 22', which is roughly the same footprint as a single-car garage, so that's the size I'm going to use as an example. With the space available in mind, you'll need to survey the site, taking into account the tools you own.

The first step is to take note of structural elements, such as floor slope, door and window location, access to electricity, and any obstructions. Also, determine if this is to be a permanent setup, or if you'll need to tuck tools away to make room for a car. With these notes in hand, you can start to tackle the setup of the shop.

LUMBER STORAGE & BREAKDOWN. The heavy and messy work of dealing with plywood and long boards is usually the first stage of any project. So it's a good idea to have the lumber breakdown and storage area close to the entrance of the shop. Often, I'm able to slide a sheet of plywood directly from the bed of my truck onto the table saw.

As the drawing below shows, the zone for cutting full sheets of plywood is going to be the biggest space gobbler by far. Ripping long lumber is a challenge, as well. Tool-wise, this involves the table saw, miter saw, and, on occasion, a circular saw. Dealing with this calls into play your best ally in small shop management, mobility. Having your tools on mobile

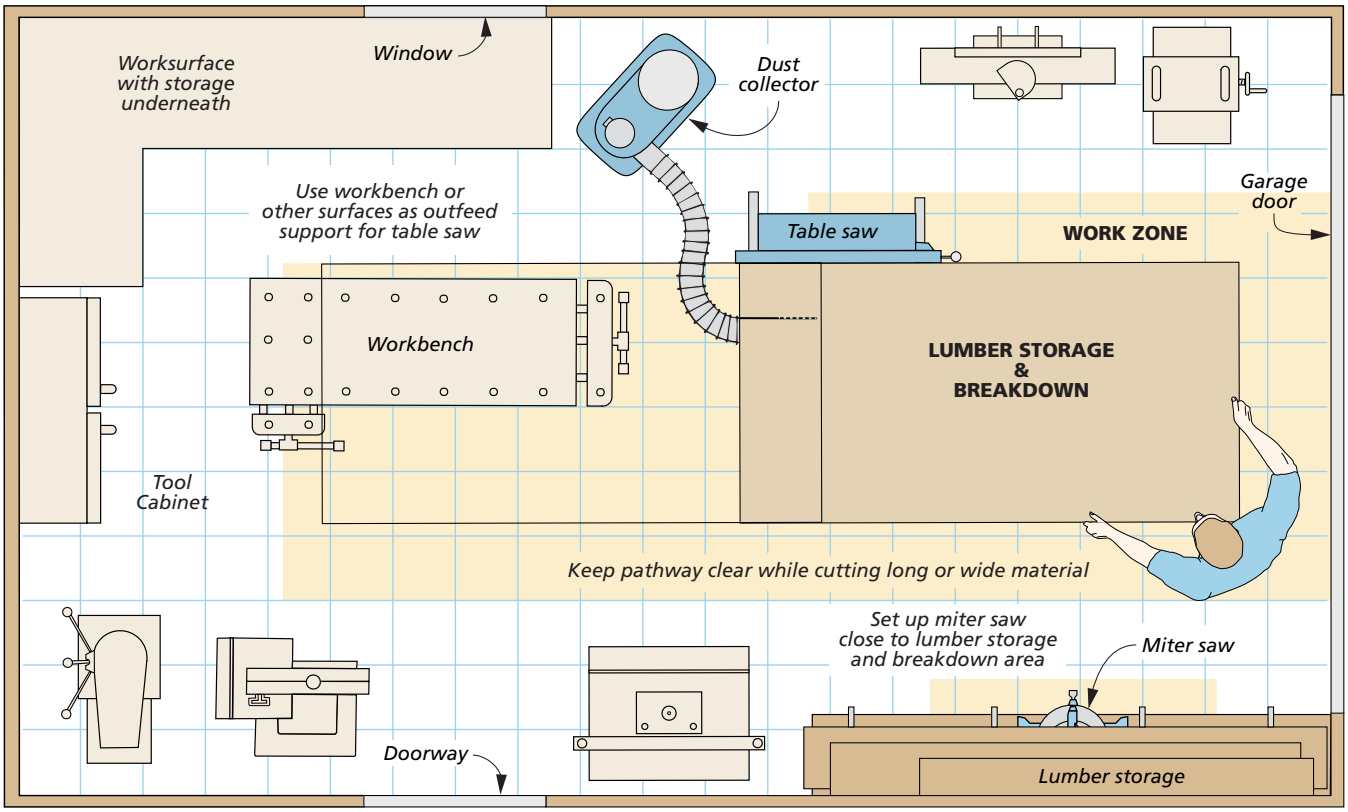

bases or casters is going let you enlist these surfaces for extra tasks or just keep them out of the way.

MILLING & JOINERY. After the material has been knocked down to manageable pieces, it's time to start shaping them into the parts that make up the project you're building. The zone space needed to do this is not as monolithic as the previous task, but it is more spread out since it involves a number of other tools in the shop.

When working with hardwoods, this begins with jointing and surfacing the stock. This is followed up with joinery, whether you're working with hardwood stock or sheet goods. This process will often involve switching back and forth between tools. So take the time to set up a logical workflow like the one shown in the top drawing to the right.

SANDING & ASSEMBLY. Once you've finished milling and shaping, the next area of focus is usually assembly. First, pre-sanding as much of the project before assembly is the way to go. While doing this, it's best to group parts into their sub-assemblies to help keep track of progress. The center of this stage is the workbench, but removing the fences of the table saw and router table and tidying up cabinet countertops can give you extra surfaces to stack these assemblies on. This same philosophy works well for gluing up all the parts (drawing at right).

FINISHING. You don't want all your woodworking efforts to be diminished with a bad finish. So proper ventilation and lighting are the most important tools here. You'll also need a source of fresh air. A trick I've found that meets both of these requirements is to cover my table saw with a sheet of old plywood and a tarp, then roll the setup into the perfect light that reflects the finish that I'm applying. On occasion, this has meant rolling the equipment out to the driveway.

SHOP SOLUTIONS. When you have a small shop, you have to improvise. But that's all part of the fun of tackling woodworking. W

▲ Mobility in the shop gives you many options. The system shown here is a simple shop-made base that you can custom-build for any shop tool.

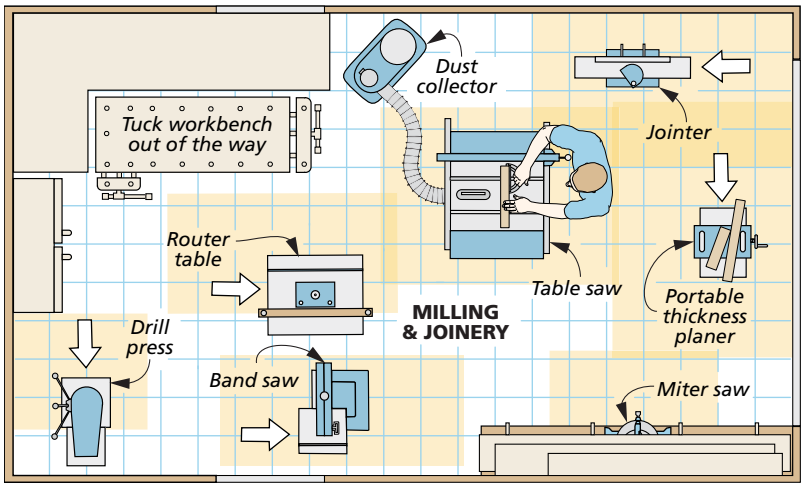

Milling & Joinery. Shaping the parts of your project may require several tools. After jointing and planing your boards, you'll move to the table saw and router table. The drill press and band saw may be used, as well.

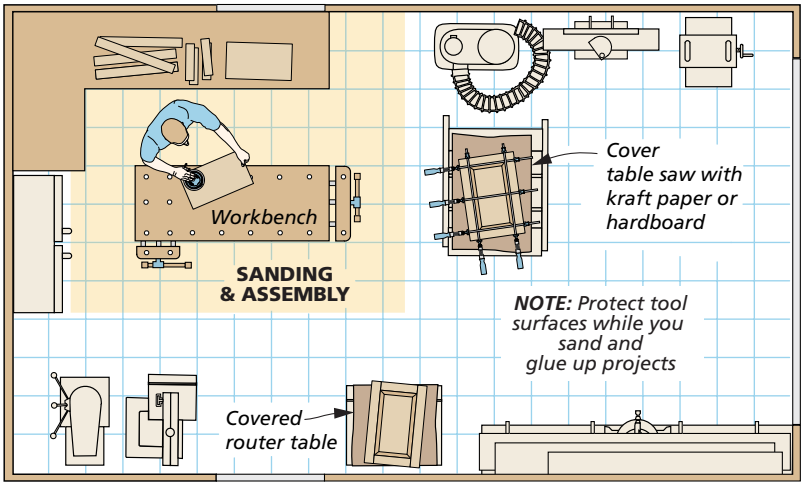

Sanding & Assembly. Claiming unused surfaces while preparing material for finishing saves time and helps keep all the project parts in order. Keep your shop vacuum handy to remove dust from the freshly sanded parts.

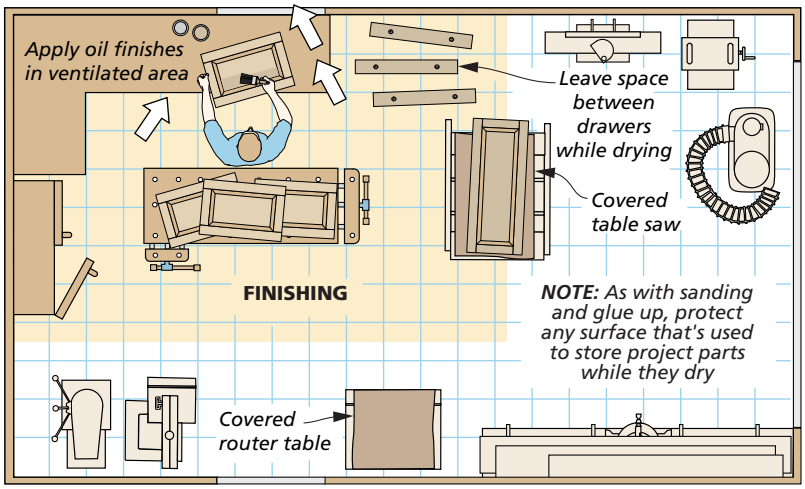

Finishing. Whether applying oil or water-based finishes, you'll want to apply the finish in a well-ventilated area, such as by an open window. Similar to sanding and assembly, spread the pieces around the shop to dry.

making precise Vertical Cuts

▲ To cut rabbets with the two-pass method, you make one cut with the piece facedown, and then a second vertical cut as shown.

Most table saw cuts are performed with the workpiece flat on the table. But every once in a while, you have to stand your workpiece on edge or end to make the desired cut. As you can see in the photos on these pages, these types of cuts can come up for everything from tenons to raised panels to rabbet joints. And this is where things can get a little tricky.

Fortunately, setting up for safe, accurate results when making these cuts is not all that difficult. It just takes the right means of support and the proper technique.

CUTS ON EDGE

If you have to perform a cut with the workpiece on edge, this usually isn't too challenging to pull off. That's because you still have the length of the piece running along the saw table, so the workpiece is unlikely to rock toward the front or back of the saw. However, the potential of the piece to tip between the rip fence and the blade can be a concern, so this is where you'll want to focus your attention to make a safe edge cut.

BACK SUPPORT. As you can see in the photos above and at left, the main consideration for an edge cut is to attach a tall auxiliary rip fence to your existing rip fence. This essentially provides a solid surface behind the workpiece, so it's unlikely to tip toward the fence.

FRONT SUPPORT. To prevent the piece from tipping toward the blade, you can take a couple of approaches. If the piece is fairly wide, such as the raised panel being beveled in the main photo above, then you may want to consider investing in a double featherboard like the one shown. This provides extra height to prevent tall workpieces from tipping into the blade, which would spoil your cut.

If the piece is fairly narrow, then a single featherboard should do the trick. For simple cuts on narrow pieces, such as the two-pass rabbet shown in the lower left photo on the previous page, I just rely on hand pressure to keep the workpiece tracking smoothly along the fence.

CUTS ON END

From time to time, you'll also run across cuts that you'll have to make with the workpiece standing on end. One of the cuts on a locking rabbet joint, for example, requires cutting a groove along the end of a piece (right photo). If you cut tenons with the workpiece standing on end (lower left photos) you can achieve cleaner cuts than you would with a dado blade. And twin tenons (lower right photos) have to be cut standing on end.

The challenge is that the workpiece needs to be supported not only between the rip fence and the blade, but also between the front and back of the saw table, to prevent the piece from rocking. If this occurs, you have at best a spoiled cut and at worst a safety hazard and a kickback risk.

Some people make these cuts with a tall auxiliary rip fence and a wide backer piece supporting the cut. While this works, I still find it a bit awkward to make a cut this way.

▲ The first cut of a locking rabbet joint requires cutting a groove on the end of a workpiece. To provide adequate support for the workpiece standing on end, I use a U-shaped sled that slides along the rip fence. A backer clamped behind the piece keeps it vertically aligned.

TABLE SAW SLED. In my opinion, a better solution is the U-shaped sled shown in the photo above. As you can see, it's designed to straddle the rip fence, and it has a wide front fence to support the workpiece. Finally, I simply clamp a backer to the front fence in order to support the back edge of the workpiece and keep it from rocking backward.

With this setup, the entire sled slides forward past the saw blade to provide the ultimate in control. By simply keeping a firm grip on the workpiece, you can push it safely and accurately through the blade without any fear of the piece rocking on its end. (As you can see, I also added a T-track to provide support in holding the workpiece in case you have to cut a short piece that would put your hand close to the blade.)

SAFETY & ACCURACY. Making table saw cuts with the workpiece on edge or end may seem a little unnerving at first. But there's really nothing to it as long as you're properly set up to do so safely, and in a controlled fashion. W

▲ Cutting the cheeks of a tenon is another common table saw cut. After cutting one of the cheeks using the sled, you simple flip the piece face for face to cut the second cheek (inset photo).

▲ You can form twin tenons on the end of a workpiece by cutting a centered groove in its end. Just flip the workpiece face for face if the groove is wider than the dado blade you're using (inset photo).

tips from our shop

Shop Notes

Router Table Mandrel Jig

When building the canisters on page 30, one of the challenges was making a round shape from a ten-sided assembly. Of course, it's possible to do this on a lathe. But I wanted to come up with another way to get the job done.

The result is the router table jig you see here. Essentially, it's a mandrel that suspends the canister above a router bit. This allows you to rotate the canister and shave away the facets to create a smooth, round form.

SIMPLE CONSTRUCTION. The jig consists of two L-shaped brackets that house a length of threaded rod (drawing below). A pair of rails join the brackets from below. The space between the rails provides a path for the router bit.

To corral the canister, a pair of plywood discs sandwich each end of the canister, as in detail 'b.' The smaller disc is sized to just fit inside the canister. Washers and nuts complete the assembly and apply clamping pressure.

USING THE JIG. I added an auxiliary fence to the router table to guide the jig and keep it centered over the bit (detail 'a'). A bowl and tray bit works well for removing the material. The rounded corners leave a smooth, tearout-free surface.

Raise the bit high enough to clean up the surface. Then it's a matter of sliding the jig forward slightly and rotating the canister across the bit.

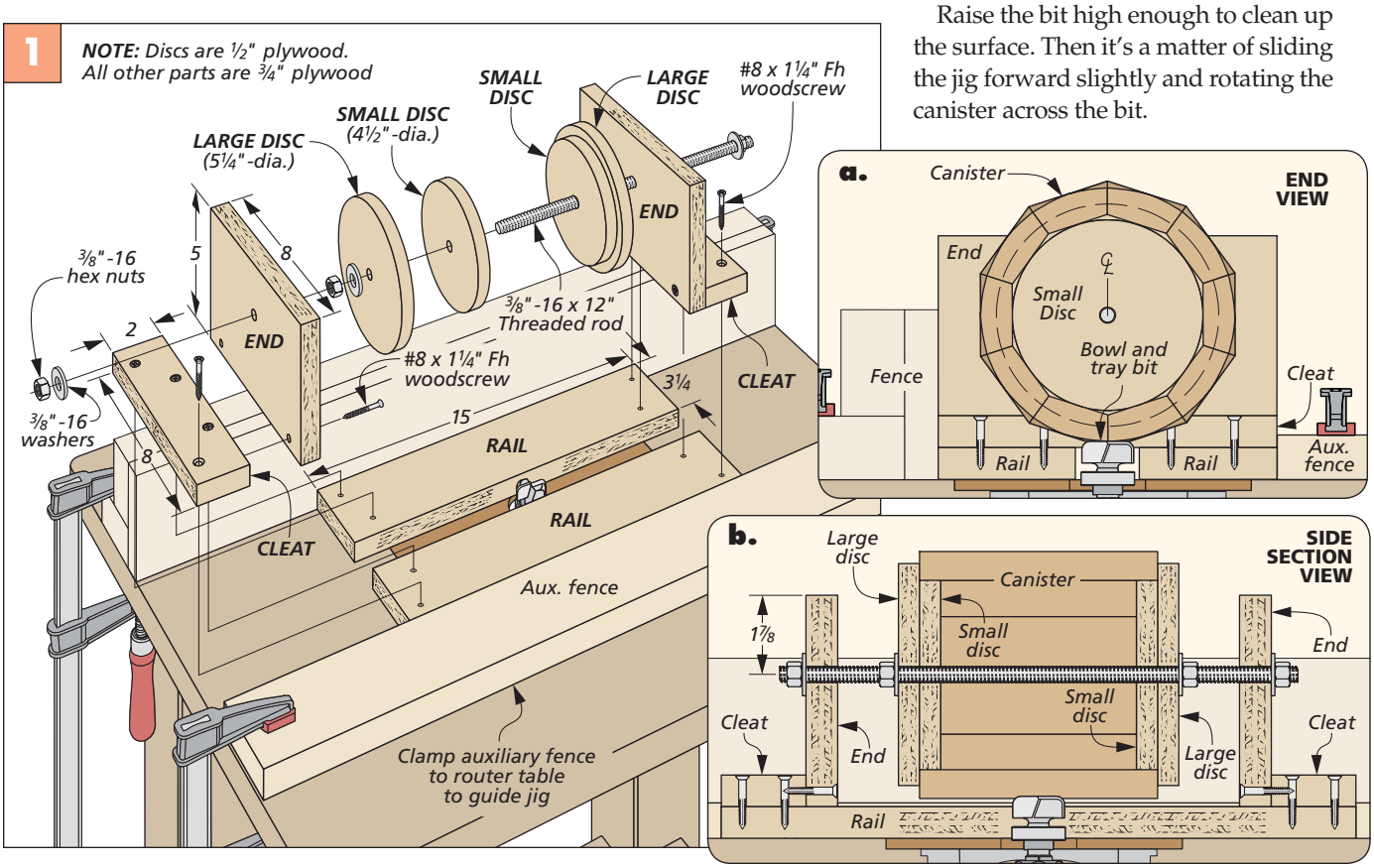

V-Notch Fence for Routing Round Workpieces

Even though profile bits (like chamfer bits) have a bearing to guide the workpiece, I like to set the fence on my router table for greater control. The problem is a straight fence doesn't provide much support for a round workpiece.

So instead of a straight fence, I made a notched fence to provide two points of contact with a round workpiece. The result is greater control of the piece and a smoother profile. This came in handy for routing a chamfer on the plug of the threaded-lid canisters on page 30.

The fence itself is pretty straightforward to make. I used a straight piece of hardwood and made a pair of 45° cuts to create a V-shaped notch on one edge, as shown in Figure 1. It can be a little tricky to set the fence in relation to the bit. But I solved that by simply making a few test cuts. To use the fence, slide the workpiece into the notch and turn it counterclockwise to shape the profile.

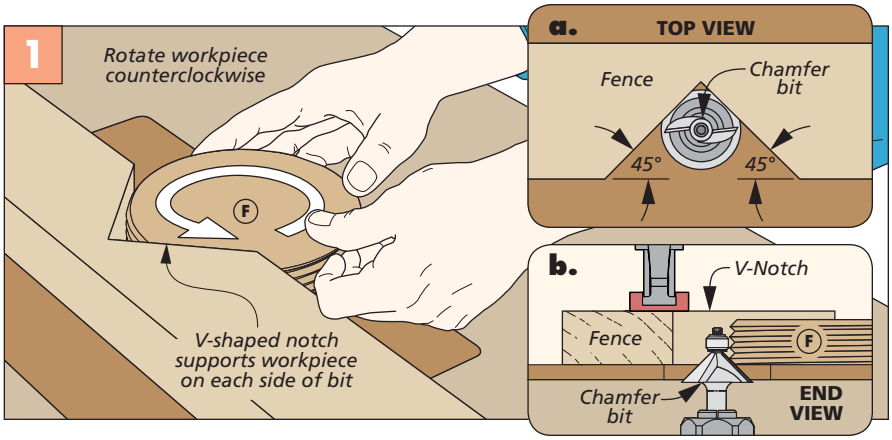

Band Saw Disc-Cutting Jig

There are multiple projects this issue that call for round discs. I could have used a jig saw along with a bit of sanding to make each one. Instead I made a jig for the band saw that works perfectly.

The jig starts with a rectangular base. Then you can cut a groove to attach a hardwood runner that fits the miter slot on your band saw. Finally, slide the jig onto the saw in order to locate the pivot pin. The pin's distance from the blade determines the radius of the circle. In detail 'a' of the main drawing, you'll see the pivot set up for the platen. To make the other sizes of discs, you'll have to drill additional holes for the pivot pin.

To use the jig, first slide it forward in the miter slot until the centerline of the pin is aligned with the front edge of the blade, as you can see in Figure 1. Then tape a simple stop in place.

Now you can fit the center hole of the workpiece over the pivot pin. With the workpiece and jig away from the blade, turn the saw on and slide the jig forward until it stops (Figure 2). Then rotate the workpiece into the blade.

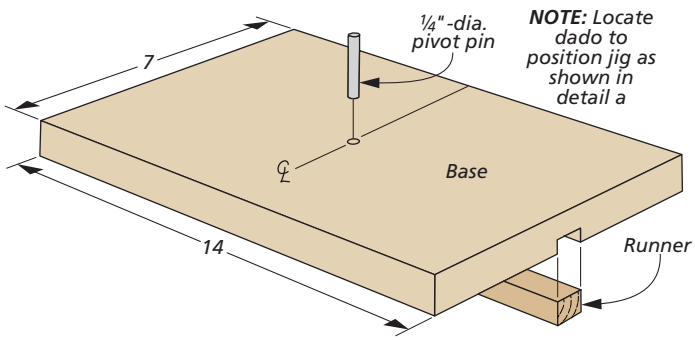

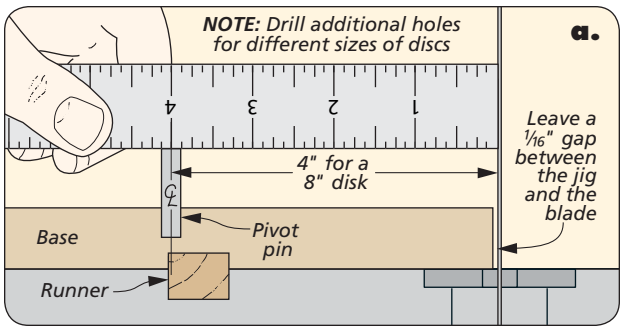

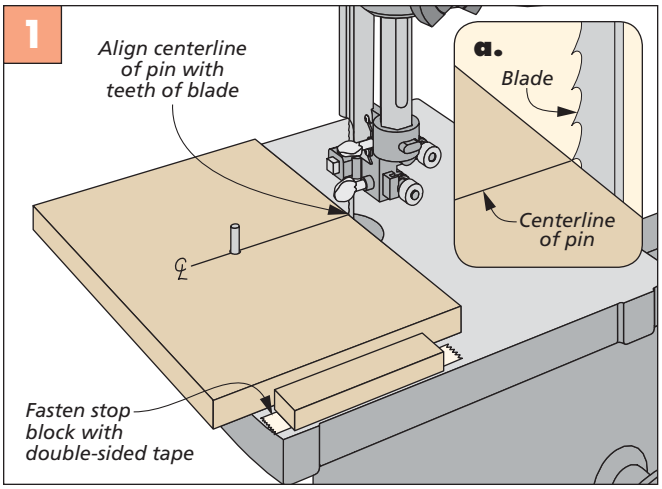

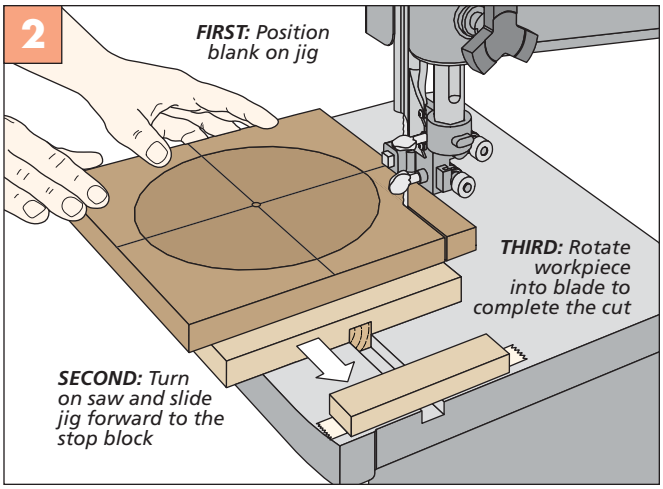

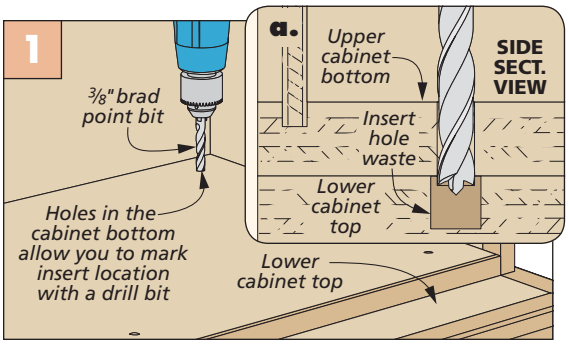

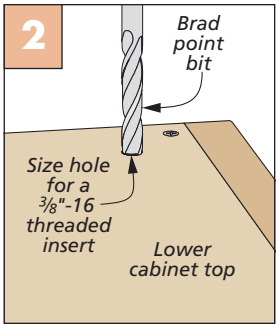

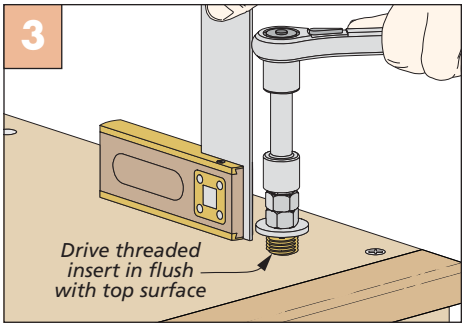

Installing Inserts

The upper and lower units of the tool cabinet on page 42 are held together with six large machine screws and threaded inserts. The threaded inserts are installed in the top panel of the lower cabinet. The method I used to lay out the positions for the inserts and install them so they're straight and square to the top is shown above.

I began by placing the upper cabinet in position and using the holes in the bottom as a guide to mark the hole locations in the lower cabinet (Figure 1). You can then remove the upper cabinet and drill the holes to the correct size for the threaded inserts (Figure 2).

To keep the inserts straight, thread two nuts onto a bolt, add a washer, and tighten this in the threaded insert. Use a ratchet and a square to guide the inserts as you drive them into the top (Figure 3).

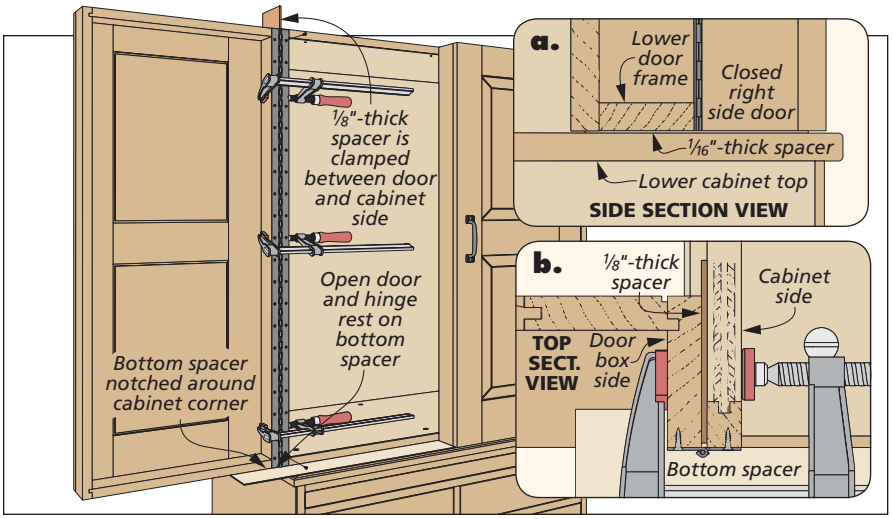

Continuous Hinges

The wide doors on the tool cabinet require continuous hinges for full support. Installing the hinges was quite easy using the method shown here.

First, I positioned a spacer underneath the door for the clearance between the door and lower cabinet (detail 'a'). I then clamped another thin spacer between the door and the upper cabinet to account for the thickness of the hinge knuckle (detail 'b'). Marking the screw holes and installing the screws is simple with the door held securely to the cabinet.

Routing on Edge

The top panels of the adjustable desk (page 34) have roundovers routed along all the ends, edges, and corners to soften their look and make them easier on the hands. And while routing along the flat faces of the panels is easy work, there are a few areas where you have to turn the panels on end to rout the roundovers, such as around the brackets and in the corners.

CLAMP-ON SUPPORT. When routing along narrow surfaces like this, the router tends to tip and spoil the cut. But it's easy to solve the problem by clamping on a scrap of "two-by" stock to give the router base a wider support platform, as you can see at right. W

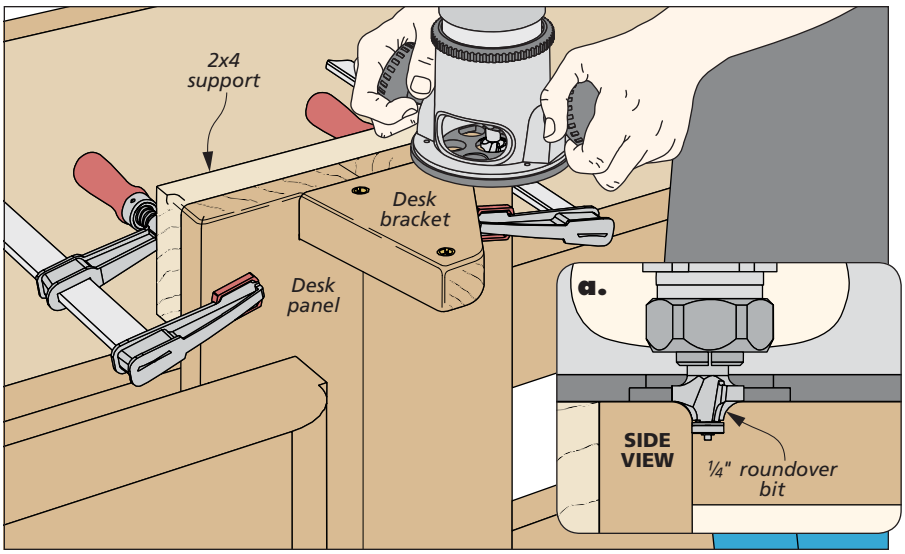

hardware & supplies
Sources

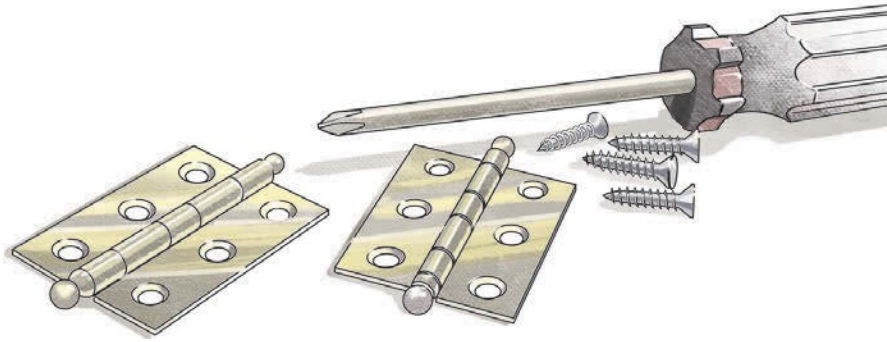

Most of the materials and supplies you'll need to build the projects are available at hardware stores or home centers. For specific products or hard-to-find items, take a look at the sources listed here. You'll find each part number listed by the company name. See the right margin for contact information.

GREAT GEAR *(p.14)*

- **Rockwell Tools**
  Vibrafree Sander RK4248K
- **Infinity Cutting Tools**
  Setup Blocks 100-075
- **MicroJig**
  Dado Stop DS-333
- **T-Clamps**
  T-Clamp . . . . . T-Clamp
- **Kreg Tool**
  Drawer Slide Jig . . . .KHI-SLIDE

THREADING JIG *(p.22)*

- **McMaster-Carr**
  2" Threaded Knobs 5993K66
  1"-6 x 36" Acme Rod 98935A862
- **MSC Direct**
  Double Angle Bit 03197100
- **Rockler**
  5/16"-18 Thrd. Knobs 54589

THREADED LID CANISTER *(p.30)*

The three canisters shown on page 30 were made with contrasting materials: (front to back) maple/padauk, walnut/padauk, and maple/bocote. The cork applied to the bottom was purchased at a hobby store.

ADJUSTABLE DESK *(p.34)*

- **McMaster-Carr**
  5"-dia. Alum. Discs . . . 9035K51
  3/8" x 1½" Alum. Bars . . 8975K41
  ¾" O.D. Spacers. 92510A798
  1½" O.D. Spacers. . . . 92510A838
  15 lb. Gas Springs. 4138T58
  Studded Star Knobs . . 60965K361
  Rubber Sheet. 1374N22

The adjustable desk was finished with three coats of lacquer.

TOOL CABINET *(p.42)*

- **Amazon**
  Raised Panel Bit . . . B000P4SO72
- **Old West Iron**
  Sq. Head Lags HCL-07-5-16
  Washers. USS-5-16
- **Lee Valley**
  4⅝" Pulls 02W2792
  4⅛" Pulls 02W2782
  20" Drawer Slides 02K3620

The tool cabinet was finished with two coats of *General Finishes Oil & Urethane Topcoat* in semi-gloss, applied with a brush.

WOODWORKING GLUES *(p.58)*

- **Lee Valley**
  Old Brown Glue 56K60.10
- **Amazon**
  Molding Glue B00868ND7K
  Epoxy B0044F59N0
- **Veneer Supplies**
  Cold Press Glue . . . . . varies
- **Sta'-Put**
  Contact Adhesive . . . . . varies

The Complete *Woodsmith* Magazine Collection *1979 to 2016*

- ✓ **Access Every Issue, Article, Photo, and Illustration Ever Published!**
- ✓ **Every Plan, Tip, and Technique, Everything You'll Ever Need!**
- ✓ **Plus, Get Instant Online Access on Your Computer, Laptop, Tablet, or Smartphone**

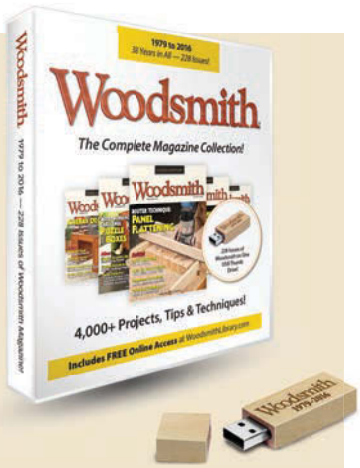

Item #WL06U

Woodsmith, The Complete Magazine Collection
on USB Flash Drive...$99

MAIL ORDER SOURCES

Project supplies may be ordered from the following companies:

amazon.com

General Finishes
800-783-6050
generalfinishes.com

Infinity Cutting Tools
877-872-2487
infinitytools.com

Kreg Tool
800-447-8638
kregtool.com

Lee Valley
800-871-8158
leevalley.com

McMaster-Carr
630-833-0300
mcmaster.com

MicroJig
855-747-7233
microjig.com

MSC Direct
800-645-7270
mscdirect.com

Old West Iron
oldwestiron.com

Rockler
800-279-4441
rockler.com

Rockwell Tools
866-955-4175
rockwelltools.com

T-Clamps
Tclamps.com

Veneer Supplies
veneersupplies.com

Sta'-Put
800-878-7876
itwstaput.com

looking inside
Final Details

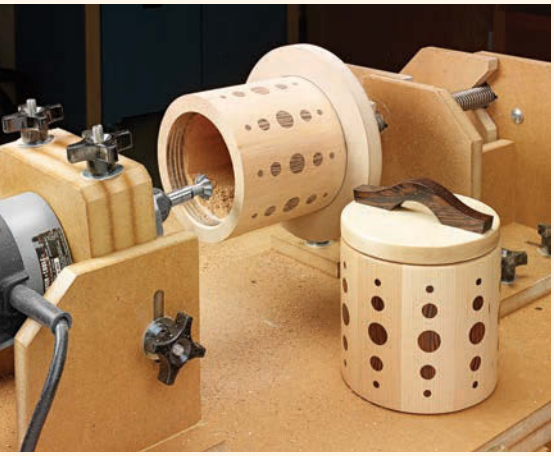

◄ *Threading Jig.* This shop-built threading jig allows you to create both internal and external threads using an ordinary router. And after you build it, put it to good use making one of these attractive canisters. Plans begin on page 22.

▲ *Smartphone Amplifier.* Although small in size, this acoustic amp puts out a big sound. And we've managed to include a few woodworking challenges, as well. Turn to page 18 for plans.

▲ *Adjustable Desk.* Whether you prefer to sit or stand while working, this desk adjusts to the perfect working height. The mechanism that allows it to work is made from off-the-shelf hardware. We'll show you how it's done, starting on page 34.

◄ *Craftsman-Style Tool Cabinet.* With raised panel doors, carved molding, and stylish knee braces, this tool storage cabinet has the classic look of fine furniture. But it's designed to be a hard-working part of any shop. Turn to page 42 to read more.